Visvesvaraya National Institute of Technology, Nagpur

Course File (2019-20)

SUBJECT : MEL103: Engineering Drawing (ED) – Theory and

MEP103: Engineering Drawing (ED) – Practical

YEAR / SEMESTER / BRANCH FIRST YEAR (Compulsory and common subject)

TEACHER : NITIN KUMAR LAUTRE

DEPARTMENT OF MECHANICAL ENGINEERING

Important Activities	Dates
Commencement of Classes	Jan 22, 2020 (Thu)
I Sessional Examination (15 Marks)	Feb 15, 2020 (Sat) @ 09: 00 AM
Display of I Sessional Marks & Mid-term review of Attendance	Feb 22, 2020 (Sat)
II Sessional Examination (15 Marks) : Not conducted due to COVID-19	Feb 21, 2020 (Sat) @ 09: 00 AM
Display of Theory Sessional Marks (Out of 40)	Apr 20, 2020 (Mon)
Display & Submission of Practical Grades	Apr 20, 2020 (Mon)
Last day of Teaching	Apr 18, 2020 (Sat)
Final Attendance Display	Apr 20, 2020 (Mon)
End Semester Theory Examination : Not conducted due to COVID-19	Apr 28, 2020 (Tue) @ 09: 00 AM
Submission of End Semester Grades	May 06, 2020 (Wed)
Re-examination	May 22, 2020 (Fri) @ 09: 00 AM

MEL103 – ENGINEERING DRAWING THEORY [3-0-0, Credit: 3]

Pre-requisites: NIL

Type of Course: ES Semester: I , II Sem B. Tech.

Assessment: Sess-I 15% + Sess-II 15% + TA 10%,+ End Sem 60%

Course Objective: The objectives of the course are

1. To understand the Principles and methods of projections as per National Standards.
2. To develop the visualization skills for interpretation of use of various objects like lines, planes and solids.
3. To understand the section of solids and development of lateral surfaces and intersection of solids.
4. To acquire skills to interpret and convert multi-views drawing into single view and vice versa.

Course Outcomes:

1. Students will be able to understand the conventions, standards for engineering drawing.
2. Students will be able to apply the knowledge of Projections, Methods to prepare the drawings for lines, planes and solids.
3. Students will be able to interpret and draw section of solids, development of lateral surfaces and intersection of solids.
4. Students will be able to visualize and convert 2D to 3D drawing and vice versa.

Course Content:

Introduction to BIS SP-46-2003, Use of various drawing instruments, Concept of scales, Representative factor and dimensioning, Conversation of Pictorial views to orthographic/ profile views, orthographic projections of points, lines, plane on principle planes/Profile plane/Auxiliary planes.

Projection of right regular solids inclined to both the planes. Section and development of surfaces of solids. (Preferably in normal position/ Inclined to one plane). Intersection of combination of regular solid (Preferably in normal position/ Inclined to one plane).Drawing isometric views and projection from orthographic projection/ orthographic views.

Reference Books:

1. Bhatt N.D and Panchal VM, Elementary Engineering Drawing, (Plane and Solid Geometry), Charotar Publishing House, 53rd Edition.

2. Jolhe Dhananjay, Engineering Drawing with An introduction to Autocad, Tata McGraw Hill Publishing Company Limited,5th Edition 2017

3. BIS-SP-46-2003, Handbook BIS SP-46 -2003, BIS

MEP103 – ENGINEERING DRAWING PRACTICAL [0-0-2, Credit: 1]

Pre-requisites: NIL

Type of Course: ES Semester: I , II Sem B. Tech.

Assessment: Mid-term Eval 40% + End Term Eval 60%

Course Objective: The objectives of the course are

1. To understand the principles and methods of projections as per National Standards.
2. To develop the visualization skills for interpretation of use of various objects like lines, planes and solids.
3. To understand the section of solids and development of lateral surfaces and intersection of solids.
4. To acquire skills to interpret and convert multi-views drawing into single view and vice versa.

Course Outcomes:

1. Students will be able to understand the conventions, standards for engineering drawing.
2. Students will be able to apply the knowledge of Projections, Methods to prepare the drawings for lines, planes and solids.
3. Students will be able to interpret and draw section of solids, development of lateral surfaces and intersection of solids.
4. Students will be able to visualize and convert 2D to 3D drawing and vice versa.

Course Content:

Introduction to BIS SP-46-2003 Explanation of various drawing instruments, symbols, RF, Dimensioning, etc. Practice of scales, Representative Factor and dimensioning on some practical exemplary figure. Conversion of pictorial views to orthographic / profile views. Projection of points and lines Projections of planes. Projections of lines and planes using Auxiliary planes.

REVIEW I of sheets.

Projections of solids. Section and development of solids. Intersection of solids. Isometric views REVIEW II of sheets

Reference Books:

1. Bhatt N.D and Panchal VM, Elementary Engineering Drawing, (Plane and Solid Geometry), Charotar Publishing House, 53rd Edition.

2. Jolhe Dhananjay, Engineering Drawing with An introduction to Autocad, Tata McGraw Hill Publishing Company Limited,5th Edition 2017

3. BIS-SP-46-2003, Handbook BIS SP-46 -2003, BIS.

COURSE OBJECTIVE (COs) MAPPING – Fall of Summer 2020.

COURSE OBJECTIVE (COs) MAPPING WITH PROGRAM OUTCOMES (POs):

MEL103	Levels ➔ 0: Not Applicable; 1: Low; 2: Medium; 3: High fulfillment with PO											
	PO1	PO2	PO3	PO4	PO5	PO6	PO7	PO8	PO9	PO10	PO11	PO12
CO1	1	1	1	1	1	3	1	3	3	3	2	3
CO2	2	2	2	2	3	2	2	2	3	3	3	2
CO3	3	2	2	2	3	2	2	2	3	3	3	2
CO4	2	2	2	2	3	1	2	2	3	3	3	3
Average	2.00	1.75	1.75	1.75	2.50	2.00	1.75	2.25	3.00	3.00	2.75	2.50
	a	b	c	d	e	f	g	h	i	j	k	l

Sr. No.	PO Heading	PO Description
PO1	Engineering knowledge	Apply the knowledge of mathematics, science, engineering fundamentals, and an engineering specialization to the solution of complex engineering problems.
PO2	Problem analysis	Identify, formulate, review research literature, and analyze complex engineering problems reaching substantiated conclusions using first principles of mathematics, natural sciences, and engineering sciences
PO3	Design/development of solutions	Design solutions for complex engineering problems and design system components or processes that meet the specified needs with appropriate consideration for the public health and safety, and the cultural, societal, and environmental considerations
PO4	Conduct investigations of complex problems	Use research-based knowledge and research methods including design of experiments, analysis and interpretation of data, and synthesis of the information to provide valid conclusions
PO5	Modern tool usage	Create, select, and apply appropriate techniques, resources, and modern engineering and IT tools including prediction and modeling to complex engineering activities with an understanding of the limitations
PO6	The engineer and society	Apply reasoning informed by the contextual knowledge to assess societal, health, safety, legal and cultural issues and the consequent responsibilities relevant to the professional engineering practice
PO7	Environment and sustainability	Understand the impact of the professional engineering solutions in societal and environmental contexts, and demonstrate the knowledge of, and need for sustainable development.
PO8	Ethics	Apply ethical principles and commit to professional ethics and responsibilities and norms of the engineering practice
PO9	Individual and team work	Function effectively as an individual, and as a member or leader in diverse teams, and in multidisciplinary settings
PO10	Communication	Communicate effectively on complex engineering activities with the engineering community and with society at large, such as, being able to comprehend and write effective reports and design documentation, make effective presentations, and give and receive clear instructions
PO11	Project management and finance	Demonstrate knowledge and understanding of the engineering and management principles and apply these to one's own work, as a member and leader in a team, to manage projects and in multidisciplinary environments
PO12	Lifelong learning	Recognize the need for, and have the preparation and ability to engage in independent and life-long learning in the broadest context of technological change

COURSE OBJECTIVE (COs) MAPPING WITH PROGRAM SPECIFIC OUTCOMES (PSOs):

	PSO1	PSO2	PSO3	← From syllabus	
CO1	2	1	1	**CO1**	Students will be able to understand the conventions, standards for engineering drawing.
CO2	3	1	1	**CO2**	Students will be able to apply the knowledge of Projections, Methods to prepare the drawings for lines, planes and solids.
CO3	3	2	2	**CO3**	Students will be able to interpret and draw section of solids, development of lateral surfaces and intersection of solids.
CO4	3	2	2	**CO4**	Students will be able to visualize and convert 2D to 3D drawing and vice versa.
Average	2.75	1.50	1.50		

Sr. No.	PSO Heading	PSO Description
PSO1	Analyze and Design	To analyze, design and develop solutions by applying fundamental concepts of science and engineering to mechanical systems.
PSO2	Mechanical Engineering in different fields	To apply mechanical engineering principles and practices for design, development, operation and maintenance of equipment including manufacturing and industrial systems
PSO3	Modern tools and technologies	To adapt modern tools and technologies to innovate and provide solutions to mechanical engineering and multi-disciplinary environments

TARGET OF COURSE OBJECTIVE (COs) AND ATTAINMENT – Fall of Summer 2020.

Academic Year	CO1	CO2	CO3	CO4	Section
2019 - 2020	0.79682	0.743	0.8	0.88	N

2019-20	Engineering Drawing			END SEMESTER EXAMINATION												
Course Code:	MEL103	Levels➔ 0: Not Applicable; 1: Low; 2: Medium; 3: High fulfillment with PO														
		PO1	PO2	PO3	PO4	PO5	PO6	PO7	PO8	PO9	PO10	PO11	PO12	PSO1	PSO2	PSO3
	CO1	1	1	1	1	1	3	1	3	3	3	2	3	2	1	1
	CO2	2	2	2	2	3	2	2	2	3	3	3	2	3	1	1
	CO3	3	2	2	2	3	2	2	2	3	3	3	2	3	2	2
	CO4	2	2	2	2	3	1	2	2	3	3	3	3	3	2	2
	MEL103	2.00	1.75	1.75	1.75	2.50	2.00	1.75	2.25	3.00	3.00	2.75	2.50	2.75	1.50	1.50
		a	b	c	d	e	f	g	h	i	j	k	l			
	CO's ↓ from evaluation	PO1	PO2	PO3	PO4	PO5	PO6	PO7	PO8	PO9	PO10	PO11	PO12	PSO1	PSO2	PSO3
CO1	*0.68*	0.68	0.68	0.68	0.68	0.68	2.03	0.68	2.03	2.03	2.03	1.35	2.03	1.35	0.68	0.68
	Avg. Absolute Attainment	0.68	0.68	0.68	0.68	0.68	2.03	0.68	2.03	2.03	2.03	1.35	2.03	1.35	0.68	0.68
Attainment of PO's a,b,c	% Absolute Attainment	33.81	38.64	38.64	38.64	27.05	101.44	38.64	90.17	67.62	67.62	49.18	81.15	49.18	45.08	45.08
TARGET % = P	80.00	1.60	1.40	1.40	1.40	2.00	1.60	1.40	1.80	2.40	2.40	2.20	2.00	2.20	1.20	1.20
PO attainment (Average)	%Attainment wrt target	**42.27**	**48.30**	**48.30**	**48.30**	**33.81**	**126.80**	**48.30**	**112.71**	**84.53**	**84.53**	**61.48**	**101.44**	**61.48**	**56.35**	**56.35**
		PO1	PO2	PO3	PO4	PO5	PO6	PO7	PO8	PO9	PO10	PO11	PO12	PSO1	PSO2	PSO3
Average of POs (%)	Average PO attainment	*70.06*												58.06		

2019-20	Engineering Drawing			IN SEMESTER EVALUATION												
Course Code:	MEL103	Levels➔ 0: Not Applicable; 1: Low; 2: Medium; 3: High fulfillment with PO														
	COxes ↓ from evaluation	PO1		PO3	PO4	PO5	PO6	PO7	PO8	PO9	PO10	PO11	PO12	PSO1	PSO2	PSO3
CO1	*0.80*	0.80		0.80	0.80	0.80	2.39	0.80	2.39	2.39	2.39	1.59	2.39	1.59	0.80	0.80
CO2	*0.74*	1.49	1.49	1.49	1.49	2.23	1.49	1.49	1.49	2.23	2.23	2.23	1.49	2.23	0.74	0.74
CO3	*0.80*	2.41	1.61	1.61	1.61	2.41	1.61	1.61	1.61	2.41	2.41	2.41	1.61	2.41	1.61	1.61
CO4	*0.88*	1.75	1.75	1.75	1.75	2.63	0.88	1.75	1.75	2.63	2.63	2.63	2.63	2.63	1.75	1.75
	Avg. Absolute Attainment	1.61	1.41	1.41	1.41	2.02	1.59	1.41	1.81	2.42	2.42	2.22	2.03	2.22	1.23	1.23
Attainment of PO's a,b,c	% Absolute Attainment	80.59	80.63	80.63	80.63	80.67	79.51	80.63	80.42	80.51	80.51	80.58	81.14	80.58	81.67	81.67
TARGET % = P	90.00	1.80	1.58	1.58	1.58	2.25	1.80	1.58	2.03	2.70	2.70	2.48	2.25	2.48	1.35	1.35
PO attainment (Average)	%Attainment wrt target	**89.55**	**89.59**	**89.59**	**89.59**	**89.64**	**88.35**	**89.59**	**89.35**	**89.45**	**89.45**	**89.54**	**90.15**	**89.54**	**90.75**	**90.75**
		PO1	PO2	PO3	PO4	PO5	PO6	PO7	PO8	PO9	PO10	PO11	PO12	PSO1	PSO2	PSO3
Average of POs (%)	Average PO attainment	*89.49*												90.34		

TIME TABLE FOR ENGINEERING DRAWING (ED) – Fall of Summer 2020.

Days	08:00 08:55	09:00 09:55	10:00 10:55	11:00 11:55	12:00 12:55	01:00 02:00	02:00 - 03:55	04:00 - 05:55
Mon			ED (C-R-C-3-2)			**L U N C H**	ED - N3 (C-R-C-0-2)	
Tue								ED -N2 (C-R-C-0-2)
Wed			ED (C-R-C-3-2)					
Thu	ED (C-R-C-3-2)						ED - N4 (C-R-C-0-2)	ED -N1 (C-R-C-0-2)
Fri								

MECHANICAL Engg., VNIT Nagpur, STUDENTS HANDOUT
Semester Session Plan in STUDENTS HANDOUT: ENGINEERING DRAWING

INSTRUCTOR: - Dr. Nitin Kumar Lautre, Mechanical Engg. Deptt.

CONTACT TIME: - Flexible hours (preferably post lunch at office). PHONE: 2801872; EMAIL: bidunitin@gmail.com or nitin@mec.vnit.ac.in

OFFICE ADDRESS: - Mechanical workshop first floor, WS-PG-13, VNIT, Nagpur.

EXPECTATIONS FROM STUDENTS: - Sincerity, Commitment, Discipline, Hard work and Self-Interest.

1. The course content listed is indicative. The syllabus for the course is the content covered in the semester (Starts on **22.01.2020, Thursday** to **18.04.2020, Saturday**).
2. 10% marks is through Surprise Viva/Quiz/Home assignment/Tutorials (Instructor discretion). Minimum pass percentage for the course is 50% or Instructor discretion in each mode (Theory MEL103 and practical MEP103 separately).
3. The default due dates (if not mentioned) for all submissions will be for maximum of Three days.
4. Students can examine their work to be assessed by the instructor during the contact hours within four days of the relevant submission.
5. Attendance for the course is minimum of 75% of total teaching hours mode (Theory MEL103 and practical MEP103 separately). Weekly performance of class will be mailed to the class group leader for complete transparency and immediate/ fearless feedback.
6. In every class it is compulsory to come equipped with engineering tools eg:- Engineering Drawing tools and Instruments, book, notebook etc.

TIME SLOT:- CRC = Class room complex building

Theory, Slot B @ CRC 3-2	Monday, 10:00 hrs	Wednesday, 10:00 hrs	Thursday, 08:00 hrs	No Extra Th. classes
Practical's @ CRC 0-2	N1-Batch on Thursday, 16:00 hrs	N2-Batch on Tuesday, 16:00 hrs	N3-Batch on Monday, 14:00 hrs	N4-Section on Thursday, 14:00 hrs

PROPOSED TENTATIVE SYLLABUS (2020)

Engineering Drawing – Theory (MEL103)
Introduction to BIS SP-46 -1988, 2003, 2014 Use of various drawing instruments, Concept of scales, Representative Factor and dimensioning. Conversion of Pictorial views to orthographic/ profile views
Orthographic projections of points, lines, planes on principle planes/ Profile planes/ Auxiliary planes.
Projection of right regular solids inclined to both the planes.
Section and development of surfaces of solids. (Preferably in normal position/ Inclined to one plane).
Intersections of combination of regular solids (Preferably in normal position/ Inclined to one plane).
Drawing isometric views from orthographic projection orthographic views
Engineering Drawing – Practical (MEP103)
Sheet No. 00: Introduction to ED (BIS SP-46 -1988 (2003/ 2014), Line contrast, symbols, RF, dimensioning, etc.
Sheet No. 01: Orthographic Projections (Pictorial to orthographic/ profile views)
Sheet No. 02: Projections of points and lines
Sheet No. 03: Projections of planes

Sheet No. 04: Projections of lines and planes using Auxiliary planes
REVIEW- I of sheets
Sheet No. 05: Projections of solids
Sheet No. 06: Section and development of solids
Sheet No. 07: Intersection of solids
Sheet No. 08: Isometric views
REVIEW- II of sheets

Recommended Books:

1. Bhatt N.D and Panchal VM , Elementary Engineering Drawing (Plane and Solid Geometry), Charotar Publishing House, 43rd Edition
2. Gill P.S., 'Engineering Drawing', S.K. Kataria and Sons, Ludhiana, India,
3. Available books from APPENDIX-A

COURSE OBJECTIVES (CO):

1. To understand the principles and methods of projection as per national standards.
2. To develop visualization skills for interpretation of views of various objects like lines, planes and solids.
3. To understand section of solid, development of lateral surfaces and intersection of solids.
4. To acquire skills to interpret and convert multi-view drawings into a single view and vice-versa.

APPENDIX-A : TEACHING – LEARNING (T-L) RESOURCES

1. Agarwal DD, Bhaskar VC and MittalGeometrical Drawing.
2. Abbott W, Practical geometry and engineering graphics: a textbook for engineering and other students
3. Ahuja TD, Elements of Engineering Drawing, United Book Corporation, Pune
4. Ananadakrishnan & Siddiqui, Engineering Graphics, Prentice Hall, India
5. Austen JA, Further graphic communication (Published by Hodder and Stoughton),
6. Baercj, Electrical and Electronic Drawing, McGraw Hill.
7. Barber, The story of Language, ELBS, Oxford, London
8. Begklay and Leach, Engineering: An introduction to creative Profession, McMillan
9. Bhatt ND, Engineering Drawing, Charotar Publishing House, Anand
10. Bogolyubov S and Voinov A, Engineering Drawing, MIR Publishers, Moscow
11. Barnes AW and Tilbrook AW, Theory and practice of drawing in SI units.
12. Chudley R, Construction geometry, vol. 1
13. Cooley and Peter, Enginering Drawing, Communication and Design, Pitmans, London
14. Croft, Meyers, Boyer, Miller and Demel, Engineering Graphics, John Wiley & Sons, New York
15. Deshpande DL and Rajaraman S, Practical Solid Geometry, St. Joseph Press, Tirvandrum
16. Dhawan RK, A text book of Geometrical Drawing, BD Kataria & sons, Ludhiana.
17. Dygdon, Giesecke, Mitchell, spencer and Hill, Technical Drawing, Collier Macmillan International
18. Frazer Reekie, Draughtsmanship,
19. French TE, Foster RJ and Vierck CJ, Engineering Drawing and Graphic Technology, McGraw Hill Book Co.
20. French TE, Foster RJ and Vierck CJ, Graphical Science and design, McGraw Hill Book Co.
21. George Pearman, Geometrical drawing (Published by Oxford University Press), G
22. Ghose DN, Geometrical Drawing for Beginners, Dhanpat Rai & Sons, Delhi.
23. Giesecke FE, Mitchell A, Spencer, Hill and Dygdon, Technical Drawing, Macmillan Publishing Co., New York.
24. Gill P.S., ‘Engineering Drawing’, S.K. Kataria and Sons, Ludhiana, India,
25. Gill P.S., ‘Machine Drawing’, S..K. Kataria & Sons Ludhiana, India.
26. Gopalakrishna HR, Vol I, Engineering Drawing, Subhas Stores, Bangalore.
27. Gopalakrishna HR, Vol II, Engineering Drawing, Subhas Stores, Bangalore.
28. Gordan, Sementsov and Ogievesk, a course in Descriptive Geometry, MIR Publishers.
29. Grant HE, Practical Descriptive Geometry, McGrawHill, New York.
30. Gujral and Shinde, Engineering Drawing, Dhanpat Rai & Sons, Delhi
31. Gupta BR, Engineering Drawing, Premier Publishing Co. Hyderabad.
32. Gupta RB, A text book of Engineering Drawing and Graphics, Satya Prakashan, New Delhi.
33. Gupta RB, Engineering Drawing and Graphics, Satya Prakashan, New Delhi.
34. Gupta RB, Johar PK and Dua AK, First year Engineering Drawing, Satya Prakashan, New Delhi.
35. Hastings DJ, Excersises in Engineering Drawing, Edward Arnold.
36. Holis HF, Teach yourself Perspective Drawing, EU Press.
37. Hood SM, Teach yourself Mech Draught manship, ELBS/Tyb/EU Press.
38. James E Bethune, Engineering Graphics with AutoCAD, Pearson publications
39. Johar PK, Gupta RB, and Gaur, First year Engineering Drawing, Satya Prakashan, New Delhi.
40. Kapur RK & Sapra PK, Engineering Drawing, Tata McGrawhill Publishing, New Delhi.
41. Lakshminarayana and Vaishwanar, A text book of Engineering Drawing, Jain Brothers, New Delhi.
42. Lakshminarayana and Mathur, A text book of Machine Drawing, Jain Brothers, New Delhi.
43. Levens AS, Graphics in Engineering and Science, John Wiley, New York.
44. Lewis AW and Millard RW, Exercises in technical drawing for GCE.
45. Lindsey D, Design and drafting of printed circuits, Bishop Graphics Inc, California.
46. Luzader WJ and Duff JM, Introduction to Engineering Drawing, Prentice Hall, New Jersey.
47. Masood S, Map Projections
48. Mathur MC and Vaishwanar RS, Engineering Drawing and Graphics, Jain Brothers, New Delhi.

49. Mayock FB, Technical Drwaing: Books one to four, ELBS and Heineman Educational Books, London.
50. Mott LC, Engineering drawing and construction
51. Nagpal GR, Geometrical Drawing, khanna publishers Delhi
52. Marang, Text book of Engineering Drawing, Satya Prakashan, New Delhi.
53. Narayana KL and Kannaiah P, Engineering GraphicsTat McGrawhill Publishing, New Delhi.
54. Nicholls and Keep, Geometry of construction (Published by Cleaver-Hulme),
55. Parkinson AC, A first year Enginering Drawing, Wheeler Publishing house.
56. Pickup F and Parker MA, Engineering Drawing with worked examples, Vol I.
57. Pickup F and Parker MA, Engineering Drawing with worked examples, Vol II.
58. Prabhu NY, A text book of Geometrical Engineering Drawing, Pune Vidyarthi Griha Prakashan, Pune.
59. Rao and Raju, Geometrical Drawing: Problems and solutions
60. Rising and Almfeldt, Engineering Graphics, Wm Brown & Co.
61. Scott, Foy and Schwendav, Drafting Fundamentals, Glencoe Publishing Co. California.
62. Sekkilar SM and Thamaraiselvi S, Engineering Drawing, Anuradha Agemncies, Kumbakonam.
63. Shah PJ, Engineering Drawing Vol I, C Jamanadas & Co. Bombay.,
64. Shah PJ, Engineering Drawing Vol II, C Jamanadas & Co. Bombay.,
65. Svension and stree, Engineering Graphics, Van Norstand, east West publisher.
66. Turner RH and Smith HJ, Engineering Geometry.
67. Varghese PI and John KC, Engineering Graphics, Jovast Publishers, Trichur.
68. Varma CL, Engineering drawing, Khanna Publishers, Delhi.
69. Venkataraman K, Geometrical Drawing, PSG College of Technology, Coimbattore.
70. Venugopal K, engineering Drawing, Wiley Eastern Ltd., New Delhi
71. Vyshnepolsky IS, Engineering Drawing, MIR Publishers, Moscow.

ASSIGNMENTS

PRACTICALS (N1-Batch) on Thursday, 16:00 hrs

Sheet No. 1: ORTHOGRAPHIC PROJECTIONS (Only for N1-Batch)

Draw three views for following objects:-

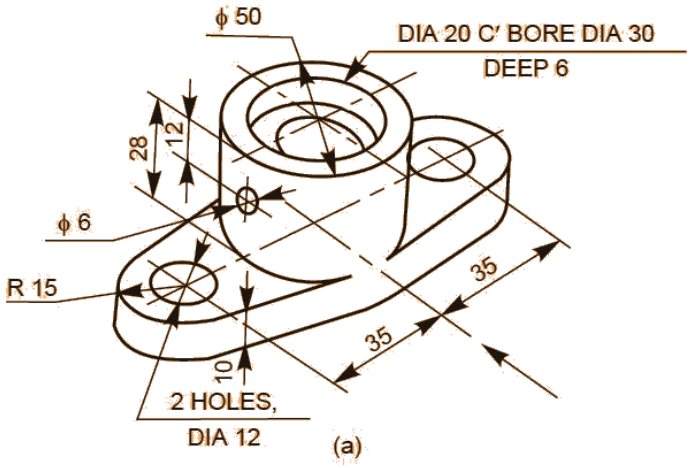
ϕ 50
DIA 20 C' BORE DIA 30
DEEP 6
28
12
ϕ 6
R 15
35
35
10
2 HOLES,
DIA 12
(a)

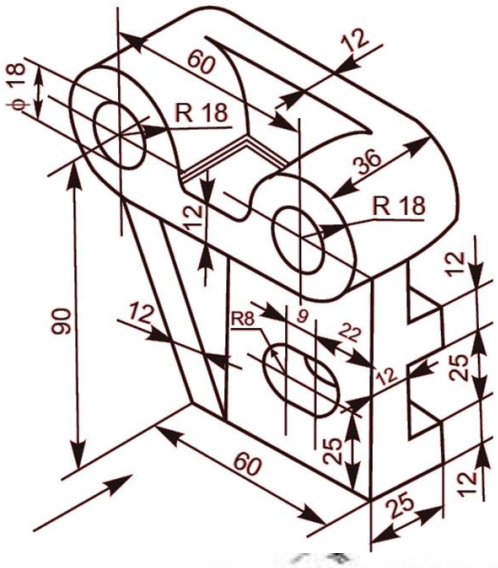
ϕ 18
60
12
R 18
36
R 18
12
90
12
R8
9
25
12
25
12
60
25

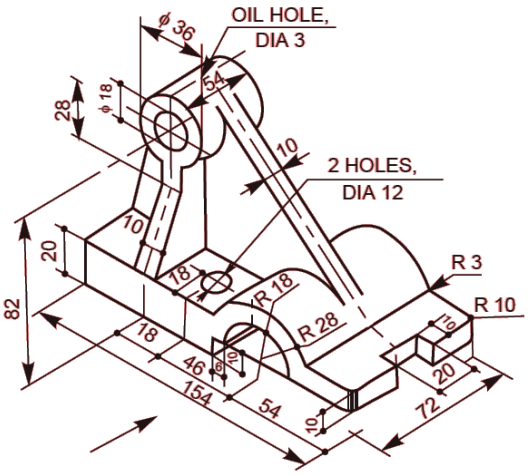
ϕ 36
OIL HOLE,
DIA 3
54
28
ϕ 18
10
2 HOLES,
DIA 12
10
20
R 3
R 10
82
18
R 18
R 28
18
46
154
54
20
72

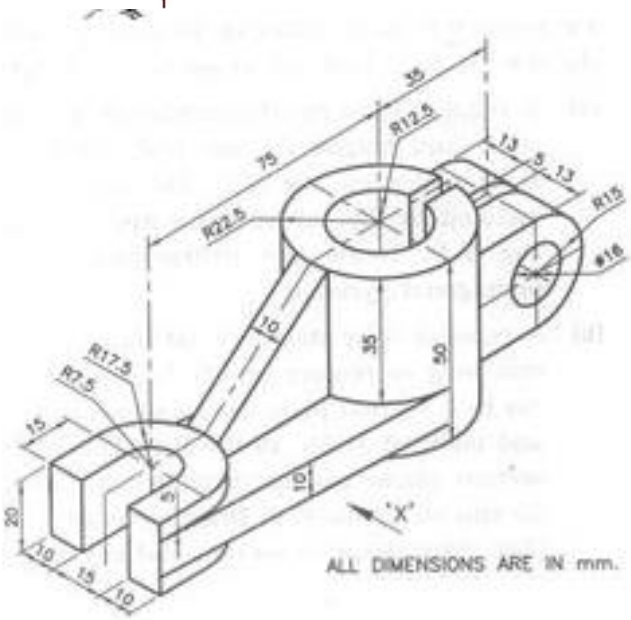
35
R12.5
75
13
5
13
R15
R22.5
ϕ16
10
35
50
R17.5
R7.5
15
10
20
10
15
10
'X'
ALL DIMENSIONS ARE IN mm.

PRACTICALS (N2-Batch) on Tuesday, 16:00 hrs

Sheet No. 1: ORTHOGRAPHIC PROJECTIONS (Only for N2-Batch)

Draw three views for following objects:-

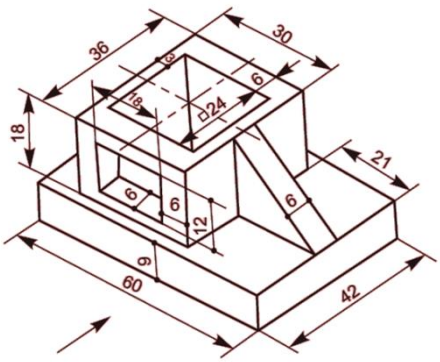

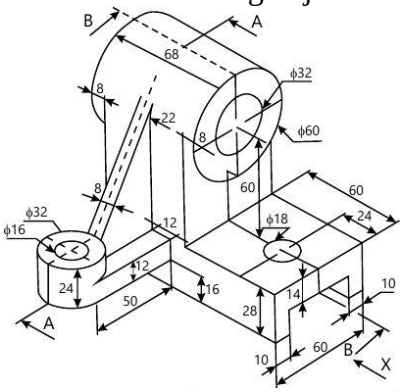

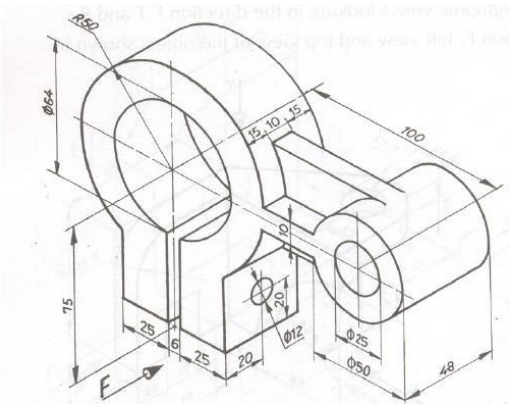

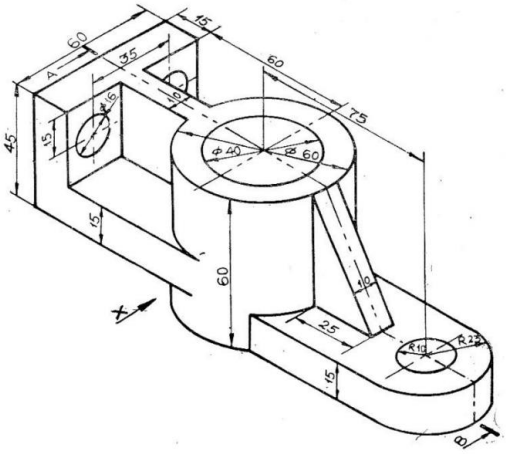

PRACTICALS (N3-Batch) on Monday, 14:00 hrs

Sheet No. 1: ORTHOGRAPHIC PROJECTIONS (Only for N3-Batch)
Draw three views for following objects:-

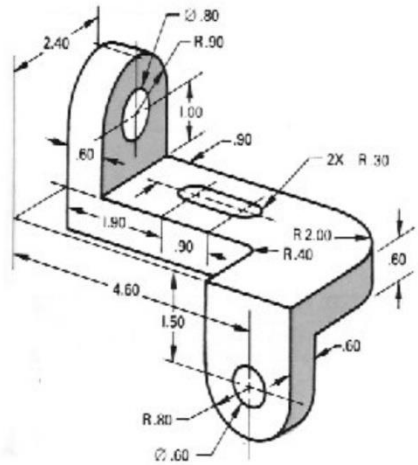

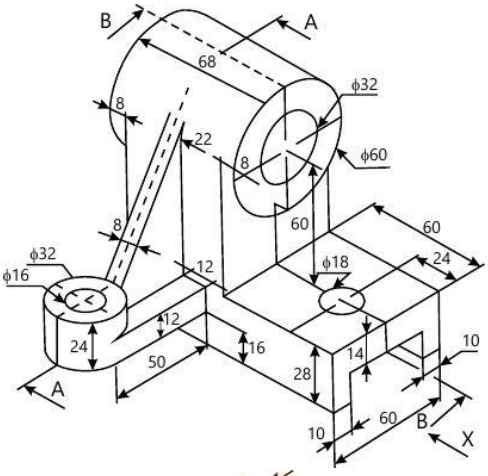

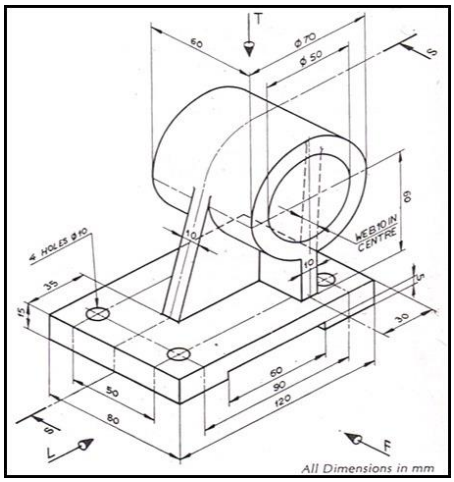

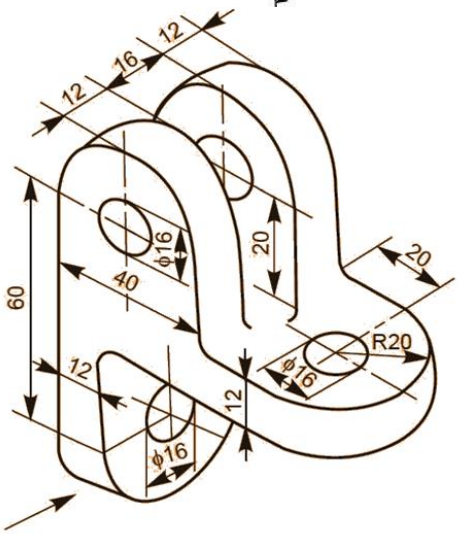

PRACTICALS (N4-Section) on Thursday, 14:00 hrs

Sheet No. 1: ORTHOGRAPHIC PROJECTIONS (Only for N4-Batch)

Draw three views for following objects:-

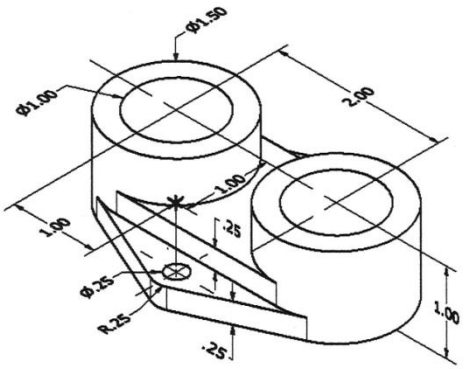

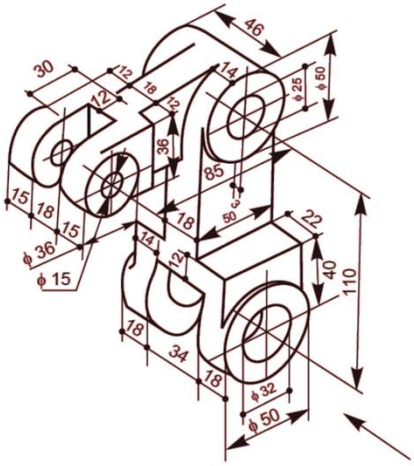

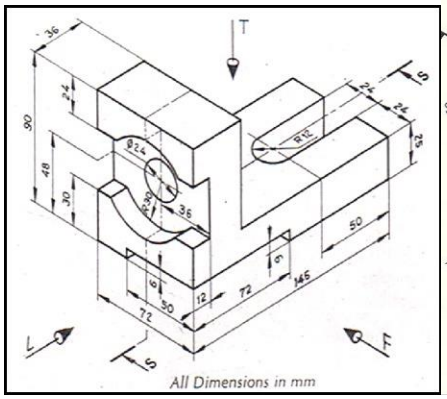

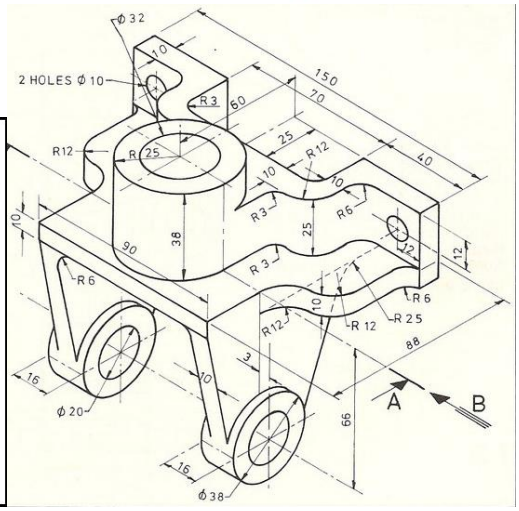

PRACTICALS (N1-Batch) on Thursday, 16:00 hrs

Sheet No. 2: PROJECTION OF LINES (Only for N1-Batch)

1) Line AB 80 mm long has its end A 20 mm above HP and 25 mm in front of VP. The line is inclined at 45° to HP and 35° to VP. Draw it's projections, find it's inclinations and traces.
2) A straight line AB, 80 mm long is kept such that it makes an angle of 45° with HP and 30° with VP. The end A is 20 mm away from both the planes of projections. Draw it's projections, find it's inclinations and traces.
3) The end A of a line AB is 10 mm in front of VP and 20 mm above HP. The line is inclined at 30° to HP and front view is 45° with XY. Top view is 60 mm long. Complete the two views, find it's inclinations and traces.
4) A line AB 70 mm long has its end A 15 mm above the HP and 20 mm in front of VP. The end B is 40 mm above HP and 50 mm in front of VP. Draw it's projections, find it's inclinations and traces. Indicate the projections of the mid-point M of the line.
5) One end P of a line PQ is 15 mm above HP and 20 mm infront of VP while the end Q is 50 mm above HP and 45 mm infront of VP. If the end projectors are at a distance of 60 mm. Draw it's projections, find it's inclinations and traces.

PRACTICALS (N2-Batch) on Tuesday, 16:00 hrs

Sheet No. 2: PROJECTION OF LINES (Only for N2-Batch)

1) Line AB has its end A 20 mm above HP and 25 mm in front of VP. The other end B is 45 mm above HP and 40 mm in front of VP. The distance between the end projectors is 60 mm. Draw it's projections, find it's inclinations and traces.
2) A line LM 70 mm long has its end L 10 mm above HP and 15 mm infront of VP. The top view and front view measures 60 mm and 40 mm respectively. Draw it's projections, find it's inclinations and traces.
3) A line PQ 65 mm long has its end P in the horizontal plane and 15 mm infront of the vertical plane. The line is inclined at 30° to the horizontal plane and is at 60° to the vertical plane. Draw it's projections, find it's inclinations and traces.
4) A line AB, 75 mm long, with end A in HP and end B in VP. The line is inclined at 35° to HP and 45° to VP. Draw it's projections, find it's inclinations and traces. Indicate the projections of the mid-point M of the line.
5) A line AB has its end A 20 mm above HP and 30 mm in front of VP. The other end B is 50 mm above HP and 60 mm in front of VP. The distance between the end projectors is 65 mm. Draw it's projections, find it's inclinations and traces.

PRACTICALS (N3-Batch) on Monday, 14:00 hrs

Sheet No. 2: PROJECTION OF LINES (Only for N3-Batch)

1) Line AB is 75 mm long and it is 30° & 40° Inclined to HP and VP respectively. End A is 12 mm above HP and 10 mm in front of VP. Draw it's projections, find it's inclinations and traces.
2) Line AB is 75 mm long . It's FV and TV measure 50 mm & 60 mm long respectively. End A is 10 mm above HP and 15 mm in front of VP. Draw it's projections, find it's inclinations and traces.
3) Plan of a 75 mm long Line CD, measures 50 mm. End C is 15 mm below HP and 50 mm in front of VP. End D is 15 mm in front of VP and it is above HP. Draw it's projections, find it's inclinations and traces.
4) The projectors drawn from VT & end A of line AB are 40mm apart. End A is 15mm above HP and 25 mm in front of VP. The VT of line is 20 mm below HP. If line is 75mm long, Draw it's projections, find it's inclinations and traces.
5) A line AB is 75 mm long. Its elevation and plan 45° and 60° inclinations with X-Y line resp. End A is 15 mm above HP and VT is 20 mm below XY line. Draw it's projections, find it's inclinations and traces.

PRACTICALS (N4-Section) on Thursday, 14:00 hrs

Sheet No. 2: PROJECTION OF LINES (Only for N4-Batch)

1) Line AB 75mm long makes 45° inclination with VP while it's FV makes 55°. End A is 10 mm above HP and 15 mm in front of VP. Draw it's projections, find it's inclinations and traces.
2) Elevation of line AB is 50° inclined to XY and measures 55 mm long while its Plan is 60° inclined to XY line. If end A is 10 mm above HP and 15 mm in front of VP, Draw it's projections, find it's inclinations and traces.
3) Plan of a 75 mm long Line CD, measures 50 mm. End C is in HP and 50 mm in front of VP. End D is 15 mm in front of VP and it is above HP. Draw it's projections, find it's inclinations and traces.
4) One end of line AB is 10 mm above HP and other end is 100 mm in-front of VP. Its elevation is 45° inclined to XY while its HT & VT are 45mm and 30 mm below XY respectively. Draw it's projections, find it's inclinations and traces.
5) Projectors drawn from HT and VT of a line AB are 80 mm apart and those drawn from its ends are 50 mm apart. End A is 10 mm above Hp, VT is 35 mm below HP while its HT is 45 mm in front of VP. Draw it's projections, find it's inclinations and traces.

PRACTICALS (N1-Batch) on Thursday, 16:00 hrs

Sheet No. 3: PROJECTION OF LINES USING AUXILIARY PLANES (Only for N1-Batch)

1. One end of line AB is 10 mm above HP and other end is 100 mm in-front of VP. Its elevation is 45□ inclined to XY while its HT & VT are 45mm and 30 mm below XY respectively. Draw its projections; find its inclinations and traces.
2. Line AB is 75 mm long. It's FV and TV measure 50 mm & 60 mm long respectively. End A is 10 mm above HP and 15 mm in front of VP. Draw its projections; find its inclinations and traces.
3. The projectors of the ends of a line AB are 50 mm apart. The end A is 20 mm above the HP and 30 mm in front of VP. The end B is 10 mm below HP. and 40 mm behind the VP. Determine the true length and traces of AB, and its inclination with the two planes
4. A line PQ 100 mm long is inclined at 30° to the HP and is at 45° to the VP. Its end P is 10 mm behind VP and is below HP. While, its HT is 20 mm in front of VP. Draw the projections of line PQ and locate its VT.

PRACTICALS (N2-Batch) on Tuesday, 16:00 hrs

Sheet No. 3: PROJECTION OF LINES USING AUXILIARY PLANES (Only for N2-Batch)

1) Line AB 75mm long makes 45° inclination with VP while it's FV makes 55°. End A is 10 mm above HP and 15 mm in front of VP. Draw it's projections, find it's inclinations and traces.
2) Elevation of line AB is 50° inclined to XY and measures 55 mm long while its Plan is 60° inclined to XY line. If end A is 10 mm above HP and 15 mm in front of VP, Draw it's projections, find it's inclinations and traces.
3) A line AB has its end A 20 mm above HP and 30 mm in front of VP. The other end B is 50 mm above HP and 60 mm in front of VP. The distance between the end projectors is 65 mm. Draw it's projections, find it's inclinations and traces.
4) A line AB is 75 mm long. Its elevation and plan 45° and 60° inclinations with X-Y line resp. End A is 15 mm above HP and VT is 20 mm below XY line. Draw it's projections, find it's inclinations and traces.

PRACTICALS (N3-Batch) on Monday, 14:00 hrs

Sheet No. 3: PROJECTION OF LINES USING AUXILIARY PLANES (Only for N3-Batch)

1. Projectors drawn from HT and VT of a line AB are 80 mm apart and those drawn from its ends are 50 mm apart. End A is 10 mm above HP, VT is 35 mm below HP while its HT is 45 mm in front of VP. Draw its projections; find its inclinations and traces.
2. A line LM 70 mm long has its end L 10 mm above HP and 15 mm in front of VP. The top view and front view measures 60 mm and 40 mm respectively. Draw its projections; find its inclinations and traces.
3. The projectors drawn from HT and VT of a straight line AB are 80 mm apart while those drawn from its end are 50 mm above the HP and the end A is 10 mm above HP. Draw the projections of AB and determine the length and inclination with the reference planes
4. The TV of a 75 mm long line CD measures 65 mm. While the length of its FV is 50 mm. Its one end C is 10 mm above HP and 15 mm in front of VP. The other end is in third quadrant. Draw the projections of CD and determine its inclinations with HP and VP. Also show its traces.

PRACTICALS (N4-Section) on Thursday, 14:00 hrs

Sheet No. 3: PROJECTION OF LINES USING AUXILIARY PLANES (Only for N4-Batch)

1) Line AB 80 mm long has its end A 20 mm above HP and 25 mm in front of VP. The line is inclined at 45° to HP and 35° to VP. Draw it's projections, find it's inclinations and traces.

2) One end P of a line PQ is 15 mm above HP and 20 mm infront of VP while the end Q is 50 mm above HP and 45 mm infront of VP. If the end projectors are at a distance of 60 mm. Draw it's projections, find it's inclinations and traces.

3) The end A of a line AB is 10 mm in front of VP and 20 mm above HP. The line is inclined at 30° to HP and front view is 45° with XY. Top view is 60 mm long. Complete the two views, find it's inclinations and traces.

4) The projectors drawn from VT & end A of line AB are 40mm apart. End A is 15mm above HP and 25 mm in front of VP. The VT of line is 20 mm below HP. If line is 75mm long, Draw it's projections, find it's inclinations and traces.

PRACTICALS (N1-Batch) on Thursday, 16:00 hrs

Sheet No. 4: PROJECTION OF LAMINAE (Only for N1-Batch)

1. Draw the projections of a regular hexagon of 25 mm side, having one of its edges in the HP and inclined at 60 o to the VP and its surface making an angle of 40 o with the HP.
2. A pentagonal plate of side 50 mm is resting on one of its edges in the HP with that edge making 40 o with VP. The plane is inclined at 30 o to the HP. Drawits projections.
3. A square ABCD of 50 mm side has its corner A in the HP, its diagonal AC inclined at 30 o to HP and the diagonal BD inclined at 45 o to the VP and parallel to the HP, Draw its projections.
4. A circular plate of 60 mm diameter is held on a point on its circumference on the VP. The diameter through this point has its front view length of 45 mm and the same diameter is inclined to the ground at 45°. Draw its projections.

PRACTICALS (N2-Batch) on Tuesday, 16:00 hrs

Sheet No. 4: PROJECTION OF LAMINAE (Only for N2-Batch)

1. A 30 o – 60 o set square of longest side 100 mm long, is in VP and 300 inclined to HP while it's surface is 45 o inclined to VP. Draw its projections.
2. A circle of 50 mm diameter is resting on HP on end A of its diameter AC which is 300 inclined to HP while it makes 45 O inclined to VP. Draw it'sprojections.
3. A hexagon with a 40 mm side has a side in the VP and is inclined at 60 o to the HP. The side opposite to the side in the VP is 50 mm in front of the VP. Draw its projections
4. An isosceles triangle of 40 mm long base side, 60 mm long altitude is freely suspended from one corner of Base side. Its plane is 45 0 inclined to VP. Drawit's projections.

PRACTICALS (N3-Batch) on Monday, 14:00 hrs

Sheet No. 4: PROJECTION OF LAMINAE (Only for N3-Batch)

1. Draw the projections of a regular hexagon of 40 mm side having one of its corners in the HP. Its surface is inclined at 45 o to the HP and the top view of the diagonal through the corner which is in HP makes an angle of 60 o with the VP.
2. A pentagonal plane lamina of sides 30 mm is resting on the HP on one of its corners so that the surface makes an angle of 60 o with the HP. If the side opposite to this corner makes an angle of 30 o with the VP and is parallel to the HP. Draw its projections.
3. A circular plate of negligible thickness and 50 mm diameter appears as an ellipse in the FV, having its major axis 50 mm long and minor axis 30 mm long. Draw its TV when the major axis of ellipse is horizontal.
4. A pentagonal plate of 45 mm side has a circular hole of 40 mm diameter in its center. The plate stands on one of its sides on the HP with its plane perpendicular to the VP and 45 o inclined to the HP. Draw its projections.

PRACTICALS (N4-Section) on Thursday, 14:00 hrs

Sheet No. 4: PROJECTION OF LAMINAE (Only for N4-Batch)

1. A regular pentagon of 30 mm sides is resting on HP on one of its sides with its surface 45 o inclined to HP. Draw its projections when the side in HP makes 30 o angle with VP.
2. A rhombus of diagonals 40mm and 70mm long respectively having one end of its longer diagonal in HP while that diagonal is 35 O inclined to HP and makes 40 O inclination with VP. Draw its projections.
3. A regular hexagon of 30 mm side has a corner on the HP. The corner opposite to this corner is 25 mm above the HP. The top-view of the diagonal through these corners is perpendicular to the VP. Draw the projections of the plane and find its inclination with the VP.
4. A semicircle of 100 mm diameter is suspended from a point on its straight edge 30 mm from the midpoint of that edge so that the surface makes an angle of 45 0 with VP. Draw its projections.

PRACTICALS (N1-Batch) on Thursday, 16:00 hrs

Sheet No. 5: PROJECTION OF SOLIDS(Only for N1-Batch)

1) A pentagonal prism has height 60 mm and the side of a base 30 mm. The prism rests on one of its sides of the base on the H.P. such that the rectangular face containing that side is perpendicular to the H.P. and makes an angle of 45° with the V.P. Draw its projections.
2) A right circular cone, 40 mm base diameter and 60 mm long axis is resting on HP on one point of base circle such that it's axis makes 45° inclination with HP and 40° inclination with VP. Draw it's projections.
3) A cylinder of diameter of base 60 mm and axis length equal to 100 mm rests on one of its generators on H.P. such that its axis is inclined at an angle of 45° with the V.P. Draw the projections.
4) A hexagonal pyramid of side of base 30 mm and axis length 90 mm rests on one of its slant edge on the H.P. such that the plane containing that slant edge on which it rests on H.P. is inclined at 45° to V.P. and the apex is near to the V.P. Draw the projection of it.

PRACTICALS (N2-Batch) on Tuesday, 16:00 hrs

Sheet No. 5: PROJECTION OF SOLIDS(Only for N2-Batch)

1) A pentagonal pyramid 30 mm base sides & 60 mm long axis, is freely suspended from one corner of base so that a plane containing it's axis remains parallel to VP. Draw it's three views
2) A cylinder diameter of base 50 mm and height 70 mm is resting on the H.P. on a point of its periphery of the base. The axis of the cylinder is inclined to H.P. by 30° and the axis is inclined at 45° to the V.P. Draw the projections. Keep top end of the cylinder near to observer.
3) A cone of diameter of base 60 mm and axis length equal to 100 mm rests on a point of its periphery of the base on H.P. such that its axis is inclined at an angle of 35° with the H.P. and 40° with the V.P. and the apex is near to the observer. Draw its projection.
4) A hexagonal prism of 30 mm side of base and 70 mm height, resting on the H.P. such that the axis is inclined at 30° to the H.P. and 60° to the V.P. Draw its projections. Keep the top end of the prism near to the V.P.

PRACTICALS (N3-Batch) on Monday, 14:00 hrs

Sheet No. 5: PROJECTION OF SOLIDS(Only for N3-Batch)

1) A pentagonal pyramid 30 mm base sides & 55 mm long axis, is freely suspended from mid-point of one edge of base so that its axis remains parallel to VP. Draw its three views.
2) A hexagonal prism of edge of base 30 mm and length of axis 60 mm is resting on a side of base on the HP. The axis of the prism is inclined at 45□ to the HP and 30□ to the VP. Draw its projections.
3) A cylinder 40 mm diameter and 50 mm axis is resting on one point of a base circle on VP while its axis makes 45□ with VP and FV of the axis 35□ with HP. Draw projections.
4) A cone 40 mm diameter and 50 mm axis is resting on one generator on HP which makes 30□ inclination with VP. Draw it's projections.

PRACTICALS (N4-Section) on Thursday, 14:00 hrs

Sheet No. 5: PROJECTION OF SOLIDS(Only for N4-Batch)

1) A pentagonal pyramid 30 mm base sides & 60 mm long axis, is freely suspended from one corner of base so that its axis remains parallel to VP. Draw its three views.
2) A hexagonal prism of edge of base 30 mm and length of axis 60 mm is resting on a side of base on the HP. The axis of the prism is inclined at 30□ to the HP and 45□ to the VP. Draw its projections.
3) A cone of base 60 mm diameter and the axis 80 mm long lies on HP with its axis inclined at 45□ and 30□ to HP and VP, respectively. Draw the top and front views of the cone.
4) A right circular cone, 40 mm base diameter and 60 mm long axis is resting on HP on one point of base circle such that its axis makes 45□ inclination with HP and 40□ inclination with VP. Draw it's projections

PRACTICALS (N1-Batch) on Thursday, 16:00 hrs

Sheet No. 6: PROJECTION OF SECTION OF SOLIDS(Only for N1-Batch)

1) A square pyramid base 40mm side and axis 65mm long has its base on HP and all the edges of the base are equally inclined to VP. It is cut by a section plane perpendicular to VP and inclined at 45 degree to HP and bisecting the axis. Draw its sectional top view, and the true shape of the section. (AU /May 2012)
2) A pentagonal prism of base edge 35mm and axis 65mm lies on HP with its base edge parallel to VP. It is cut by a plane perpendicular to HP and inclined at 30 degree to VP passes through a point 8mm away from the axis. Draw the sectional elevation and true shape of the section. (AU /May 2009)
3) A cone, diameter of base 54 mm and height 66 mm, rests on its base in HP. An auxiliary vertical section plane inclined to VP at 45° cuts the cone and is 10 mm in front of the axis. Draw its top view, sectional front view, true shape of the section.
4) A cylindrical glass jar, diameter of base 60 mm and height 75 mm, is completely filled with water. It is then tilted on the rim of its base in such a manner so that half the water drains out. Draw the projections of the cylindrical glass jar showing remaining water in it.

PRACTICALS (N2-Batch) on Tuesday, 16:00 hrs

Sheet No. 6: PROJECTION OF SECTION OF SOLIDS(Only for N2-Batch)

1) A pentagonal pyramid is resting on its base on the ground with axis (100 mm) parallel to frontal plane (FP) and perpendicular to the top plane. One of the sides of the base is 50 mm which is closer and parallel to the FP. A section plane cuts the pyramid at a distance of15 mm from the axis with section plane making an angle of 50° with FP. Draw the projections and true shape of the cut section. (AU /May 2011)
2) A hexagonal prism of base side 30mm and axis height 75mm is resting on its base on HP such that a rectangular face is parallel to VP. It is cut by a section plane perpendicular to VP and inclined at 30 degree to HP, meeting the axis at a distance of 40mm from the base.(AU /Jan 2011)
3) A cone with base circle diameter 60 mm and axis length 75 mm is kept on its base on the ground. It is cut by a sectional plane perpendicular to H.P. and inclined at 60° to V.P. at a distance of 8 mm away from the top view of axis. Draw sectional elevation and true shapeof the section.
4) A cylinder diameter of base 50 mm and height 70 mm is resting on H.P. on its base. It is cut by A.V.P. in such a way that it makes an angle of 45° with V.P. and passing 10 mm from the center of its height. Draw elevation, sectional view, Sectional side view and trueshape of the section.

PRACTICALS (N3-Batch) on Monday, 14:00 hrs

Sheet No. 6: PROJECTION OF SECTION OF SOLIDS(Only for N3-Batch)

1) A pentagonal pyramid of base side 30mm and axis length 60mm is resting on HP on its base with a side of base parallel to VP. It is cut by a plane inclined at 45 degree to VP and perpendicular to HP and is 12mm away from the axis. Draw its top view, sectional front view and true shape of the section. (AU /May 2010)
2) A hexagonal prism side of base 40mm and height 70mm stands vertical with a base edge parallel to VP. It is cut by a plane perpendicular to both HP and VP at a distance of 10mm from the axis. Draw the projection and true shape of the section. (AU /May 2011)
3) A cone of base 50mm diameter and axis 60mm long, is resting on its base on HP. It is cut by a section plane, perpendicular to VP and parallel to an extreme generator and passing through a point on the axis at a distance of 20mm from the apex. Draw its sectional view and true shape of the section (AU /Jan 2013)
4) A cylinder diameter of base 50 mm and height 70 mm is resting on V.P. on its base. It is cut by A.I.P. in such a way that it makes an angle of 45° with H.P. and passing 10 mm from the center of its height. Draw elevation, sectional view, Sectional side view and true shapeof the section.

PRACTICALS (N4-Section) on Thursday, 14:00 hrs

Sheet No. 6: PROJECTION OF SECTION OF SOLIDS(Only for N4-Batch)

1) A pentagonal pyramid, side of base 30mm and height 52mm, stands with its base on HP and an edge of the base is parallel to VP and nearer to it. It is cut by a plane perpendicular to VP, inclined at 40 degree to HP and passing through a point on the axis, 32mm above the base. Draw the sectional top view. Develop the lateral surfaces of the truncated pyramid. (AU /Jan 2013)
2) A hexagonal prism, side of base 30 mm and axis length 65 mm, has its corner of base on HP and the axis parallel to VP and inclined at 40° to the HP. A section plane with its HT perpendicular to XY line and VT inclined at 60°to XY line and passing through the highest corner cuts the prism. Draw the sectional plan and true shape of the section.
3) A cone of base diameter 60 mm and axis height 90 mm is resting on its base on V.P. One cutting plane parallel with V.P. and perpendicular to H.P. is cutting the cone such that true shape of the section of the cone is a circle of diameter 35 mm. Draw sectional front view and top view of the cone.
4) A cylinder diameter of base 50 mm and height 70 mm is resting on H.P. on its base. It is cut by A.I.P. in such a way that it makes an angle of 45 degree with H.P. and passing 10 mm above the center of its height. Draw elevation, sectional top view, Sectional side view and true shape of the section.

PRACTICALS (N1-Batch) on Thursday, 16:00 hrs

Sheet No. 7: DEVELOPMENT OF SURFACES FOR SOLIDS(Only for N1-Batch)

1) A pentagonal pyramid, side of base 40 mm and height 80 mm is resting on H.P. on its base with one of the edges of the base away from V.P. is parallel to V.P. It is cut by an A.I.P. which is inclined at $60^{O}$with H.P. and passing 20 mm below the apex. Draw its complete development.
2) A cylinder diameter of base 50 mm and height 70 mm is resting on H.P. on its base. It is cut by A.I.P. in such a way that it makes an angle of 45 degree with H.P. and passing 10 mm above the center of its height. Draw its complete development.
3) A cone with base circle diameter 60 mm and axis length 75 mm is kept on its base on the ground. It is cut by a sectional plane perpendicular to H.P. and inclined at 60° to V.P. at a distance of 8 mm away from the top view of axis. Draw its complete development.
4) Draw a semicircle of 100 mm diameter and inscribe in it a largest circle. If the semicircle is development of a cone and inscribed circle is some curve on it, then draw the projections of the cone showing the curve.

PRACTICALS (N2-Batch) on Tuesday, 16:00 hrs

Sheet No. 7: DEVELOPMENT OF SURFACES FOR SOLIDS(Only for N2-Batch)

1) A cone with base circle diameter 60 mm and axis length 75 mm is kept on its base on the ground. It is cut by a sectional plane perpendicular to H.P. and inclined at 60° to V.P. at a distance of 8 mm away from the top view of axis. Draw its complete development.

2) A pentagonal pyramid, side of base 40 mm and height 80 mm is resting on H.P. on its base with one of the edges of the base away from V.P. is parallel to V.P. It is cut by an A.I.P. which is inclined at 60° with H.P. and passing 20 mm below the apex. Draw itscomplete development.

3) A cylinder diameter of base 50 mm and height 70 mm is resting on H.P. on its base. It is cut by A.V.P. in such a way that it makes an angle of 45° with V.P. and passing 10 mm from the center of its height. Draw its complete development.

4) Draw a semicircle of 100 mm diameter and inscribe in it a largest rhombus. If the semicircle is development of a cone and inscribed rhombus is some curve on it, then draw the projections of the cone showing the curve.

PRACTICALS (N3-Batch) on Monday, 14:00 hrs

Sheet No. 7: DEVELOPMENT OF SURFACES FOR SOLIDS(Only for N3-Batch)

1) A triangular pyramid of side of base 50 mm and height of axis 100 mm resting on its base on the H.P. such that one of the edges of the base parallel to V.P. and near to V.P. The pyramid is cut by a cutting plane parallel to V.P. and perpendicular to H.P. by passing through the distance 15 mm form the axis of the pyramid. Draw its complete development.
2) A hexagonal prism is resting on H.P. on its base with two edges of base parallel to V.P. It is cut by an A.I.P. which is perpendicular to V.P. and inclined to H.P. by 45 degree and passing through a point 40 mm above the base & on axis. Draw its complete development. Assume side of base 30 mm and height 60 mm.
3) A cylinder diameter of base 50 mm and height 70 mm is resting on V.P. on its base. It is cut by A.I.P. in such a way that it makes an angle of 45° with H.P. and passing 10 mm from the center of its height. Draw its complete development.
4) A particle which is initially on base circle of a cone, standing on HP, moves upwards and reaches apex in one complete turnaround the cone. Draw its path on projections of cone as well as on its development. Assume base circle diameter as 50 mm and axis length as 70mm.

PRACTICALS (N4-Section) on Thursday, 14:00 hrs

Sheet No. 7: DEVELOPMENT OF SURFACES FOR SOLIDS(Only for N4-Batch)

1) A cylinder diameter of base 50 mm and height 70 mm is resting on V.P. on its base. It is cut by A.I.P. in such a way that it makes an angle of 45° with H.P. and passing 10 mm from the center of its height. Draw its complete development.
2) A hexagonal pyramid of side of base 40 mm and height of axis 110 mm is resting on one of its inclined vertical surface on H.P. such that its axis remains parallel to the V.P. It is cut by a cutting plane which is inclined at an angle 45° with H.P. and bisecting the axis of the pyramid. Draw its complete development.
3) A pentagonal prism, side of base 30 mm and axis length 65 mm, has edges of its base on HP and the axis parallel to VP and inclined at 40° to the HP. A section plane with its HT perpendicular to XY line and VT inclined at 45°to XY line and passing through the highest corner cuts the prism. Draw its complete development.
4) A vertically half cone of 50 mm base diameter, 70 mm axis is standing on its half base on HP with its flat face parallel and nearer to VP. An inextensible string is wound round its surface from one point of base circle and brought back to the same point. If the string is of shortest length, find it and show it on the projection of the cone

ASSIGNMENTS SUBMITTED BY STUDENTS:

Name: Arjun Manikrao Paul

Roll : N005 (N-1 Batch)

ID : 24825

file Name: N005_A1_ARJUN

ED-ASSIGNMENT -1

Q.1 Draw the projections of a cone, base 45mm diameter and axis 50mm long, when it is resting on the ground on point on it's base circle with the axis making an angle of 30° with HP and it's top view making angle 45° with V.P.

Page No. 1

Ans.

- Given:

$\phi = 45mm$

height = 50mm

θ with HP = 30°

θ with VP by top view = 45°

- Procedure:

(i) Draw the top view and front view of the cone with the base on the ground.

(ii) Tilt the front view so that the axis makes 30° angle with xy. Project the second top view.

(iii) Now, make the top view of the axis at 45° angle with the V.P., Now accordingly reproduce the top view by measuring from second diagram top view. and then project final front view.

Diagram: (ON NEXT PAGE)

... (P.T.O.)

Given:

$\phi = 45mm$, height $= 50mm$

θ_1 (with HP. By axis) $= 30°$

θ_2 (with VP. By top view) $= 45°$

NAME- ARJUN MANIKRAO PAUL

Roll No: N005

RF - 1:1

Topic: PROJECTION OF SOLIDS

ASSIGNMENT No: 1

Page No: 2

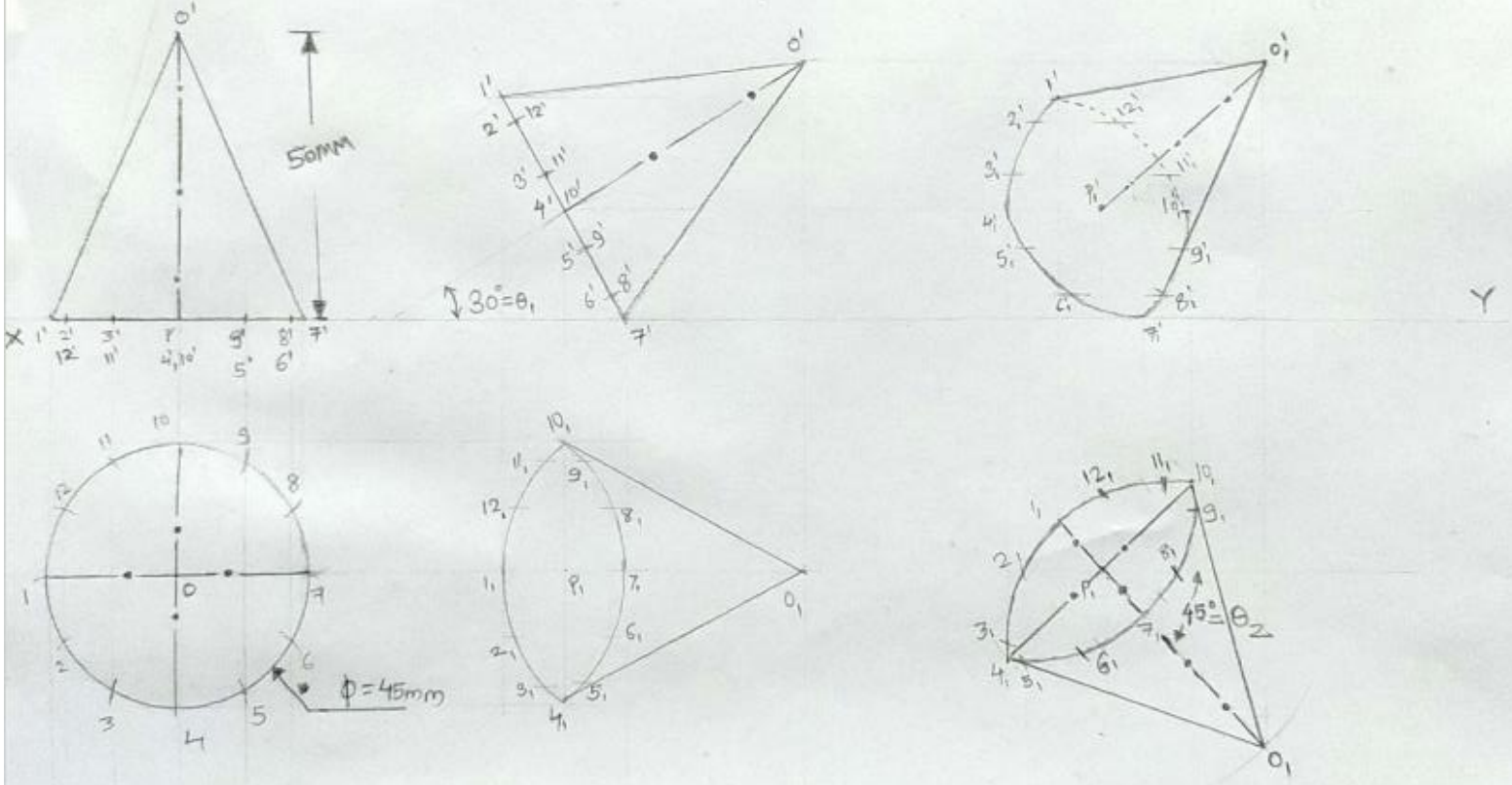

Step - I

Step - II

Step - III

Q. 2 Draw a cylinder of diameter 50mm and height 70mm, while circular face is resting on H.P. & it makes an angle 45° with the axis to H.P. Draw Both Top view and front view?

Page No. 3

Ans: Given:

$\phi = 50mm$

height = 70mm

θ (with HP By axis) = 45°

Procedure:

(i) Draw the top view and front view of the cylinder with it's base on the ground.

(ii) (a) tilt the front view of cylinder so that the axis of cylinder makes 45° angle with H.P.

(b) By Projecting front view, make top view, which will be final top view.

NOTE: (Diagram ON NEXT PAGE)

... (P. T. O.)

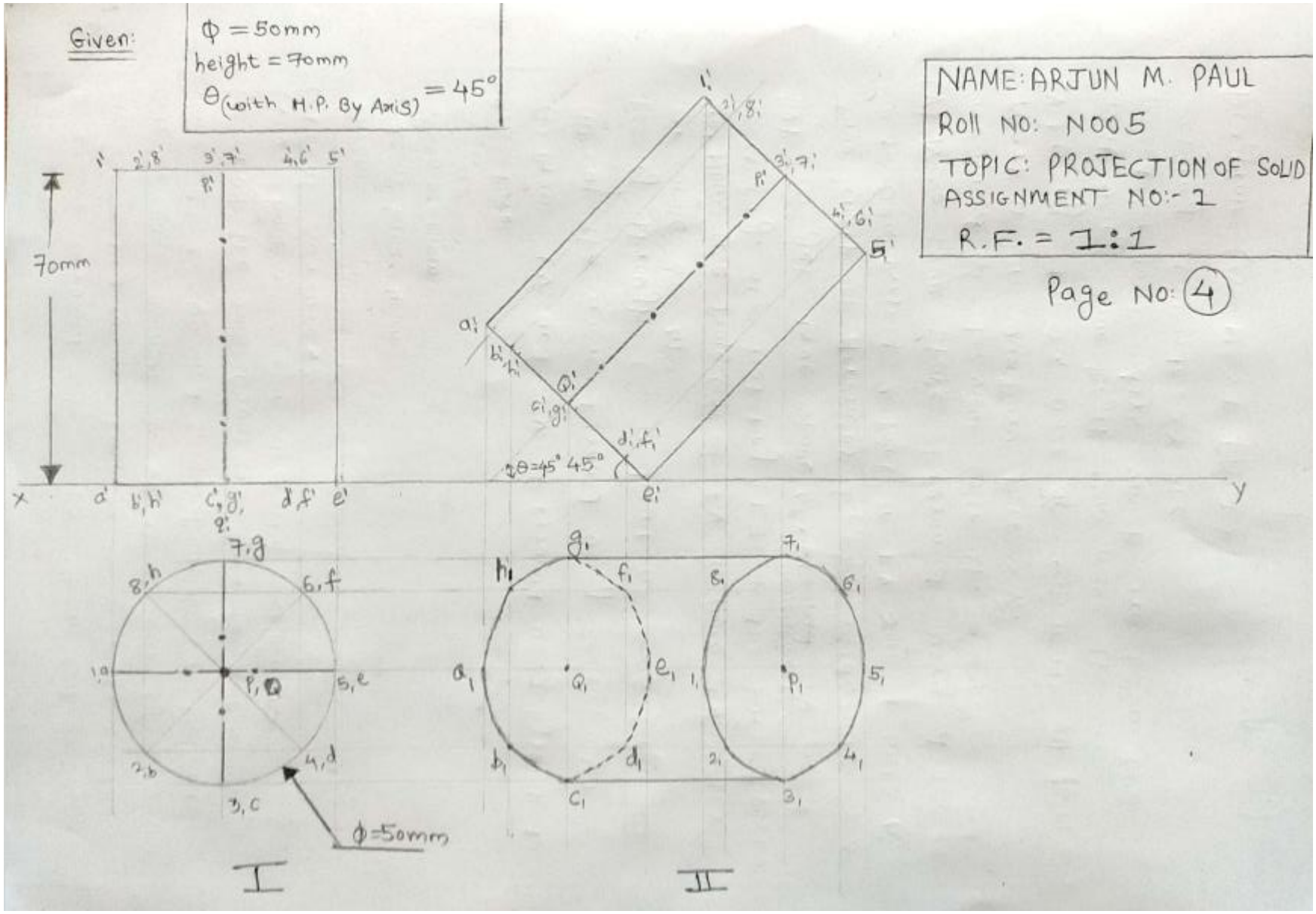
Given:
Φ = 50mm
height = 70mm
θ (with H.P. By Axis) = 45°
NAME: ARJUN M. PAUL
Roll NO: N005
TOPIC: PROJECTION OF SOLID
ASSIGNMENT NO:- 1
R.F. = 1:1
Page NO: 4
70mm
θ=45° 45°
Φ=50mm
I
II

Roll: N005
Name: ARJUN MANIKRAO PAUL
ID: 24825

file Name: N005_A2_ARJUN

ED ASSIGNMENT-2

Page NO: 1

Q.1 A square prism of 50mm side base and 80mm in height is resting on its base on HP with all sides of base making equal angle with VP. it is cut by a section plane normal to VP and passing through the left bottom corner and top right corner of elevation. Draw front view, sectional top view and true shape of section. Also draw the development of lateral surfaces.

Ans. **Given:**

Side of square prism = 50mm
height = 80mm

Procedure:

(i) Draw the top view and front view with (fade) light shade.

(ii) then, cut the front view using section VT which will pass through left bottom corner and right top corner.

(iii) take a Parallel line of section VT, named is at x_1y_1. Now, measure distance between ~~front~~ top view and xy line.

(iv) using measured distance, Draw true shaped of the prism in x_1y_1 auxilliary plane.

(v) Draw Development first with light shade. Mark the points and then dark the lines below cutting section towards the base of prism.

Diagram: (ON NEXT PAGE)

... (P.T.O.)

Given:
Side = 50mm
height = 80mm

Name: ARJUN MANIKRAO PAUL
Roll: N005
TOPIC: SECTION OF SOLID CLUBBED WITH DVELOPMENT OF SOLID
ASSIGNMENT NO:-2
RF = 1:2

Page No: 2

RF = 1:2

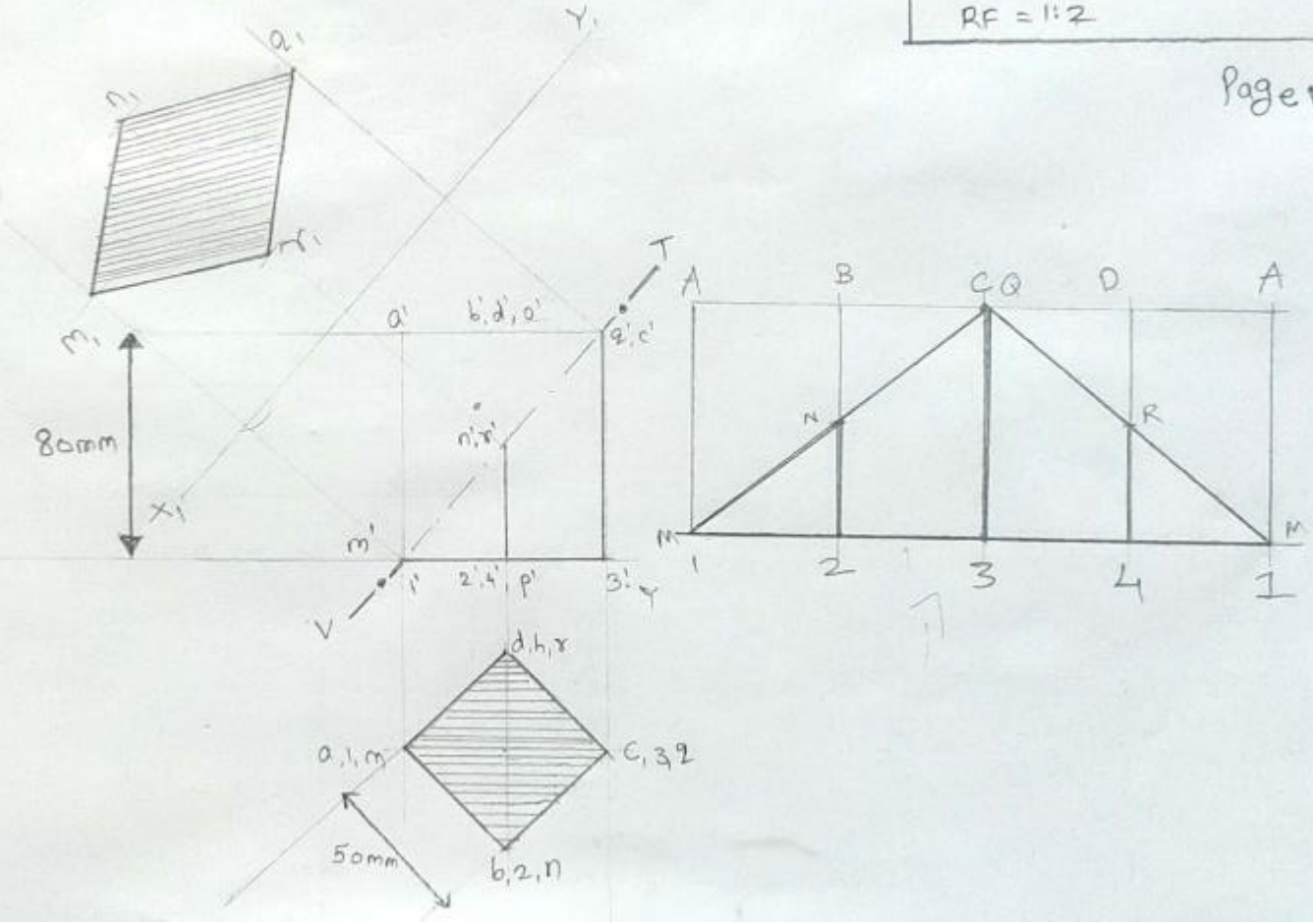

Q.2 A square Pyramid side of base 40mm and axis 60mm long is resting on it's base on HP with one of the side of Base parallel To VP. it is cut by a section plane ⊥r to VP and inclined at 45° to HP and Bisecting the axis. Draw it's Sectional top view, true shape of section and the Development of Lateral surfaces?

Page No. 3

Ans: Given:

Side of base = 40mm

Axis = 60mm

$\theta_1 = 45°$

Procedure:

(i) Draw F.V. and T.V. of Pyramid using light shade.

(ii) Cut the square Pyramid using Section VT Passing through the midpoint of axis length at an angle of 45°.

(iii) Now, use Projection of F.V. to make T.V. after sectioning. Use hatching (▨) in the cutted portion.

(iv) To get true shape of ~~Pyramid~~ Development, we need True length of generator. for which made arc from oa to oa_1, Project a_1 Point in F.V. Join it with o'.

(V) Make true Shape of Pyramid using distances measured of top view with the xy line and Mark it in auxilliary plane x_1y_1.

(Vi) using T.L. $o'a_1$ make an arc, mark all points on it using true length. Now, make the lines joined by points dark which are below the sectioning towards XY line.

Diagram: (ON NEXT PAGE)

... (P.T.O.)

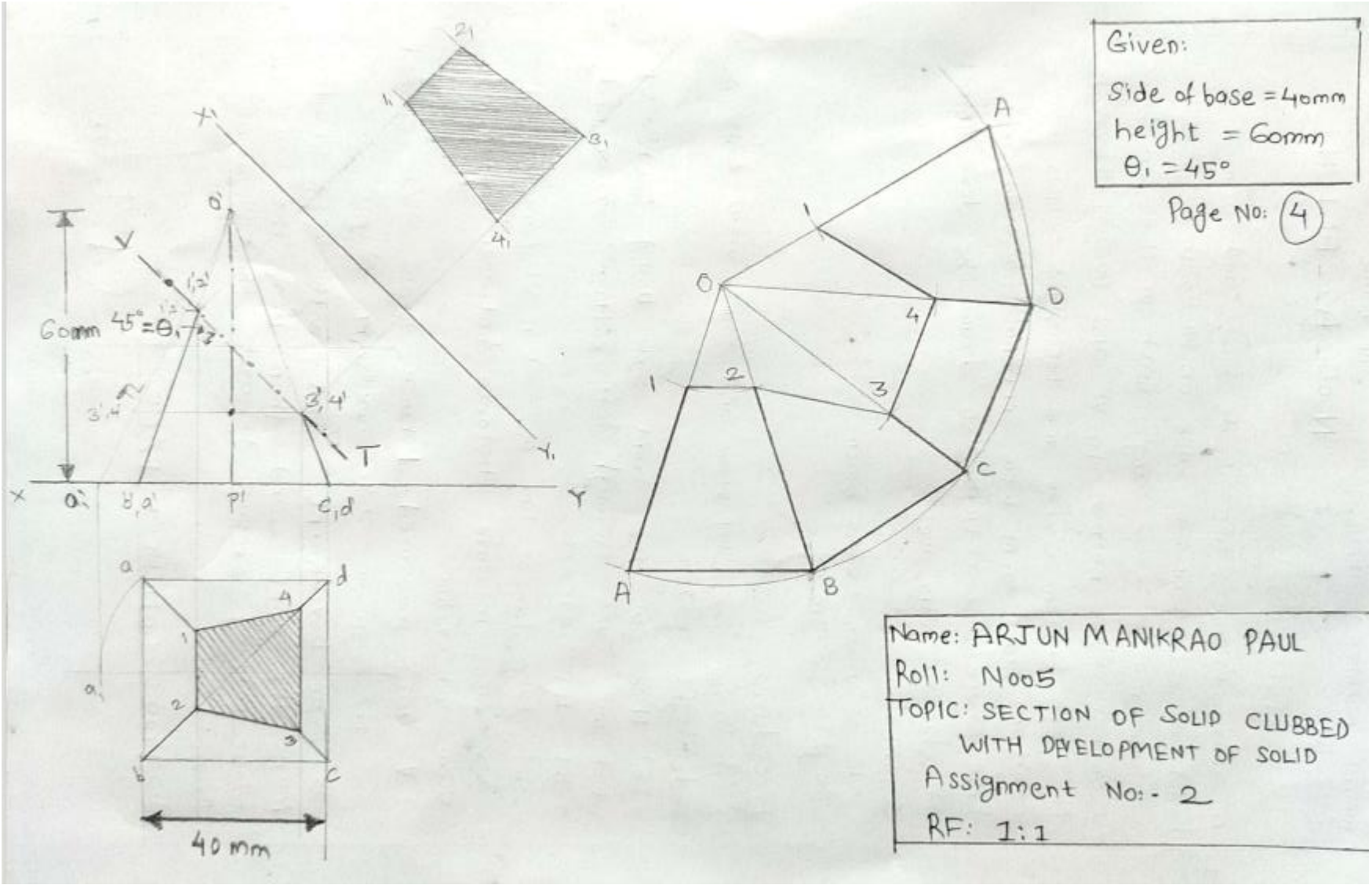
Given:
Side of base = 40mm
height = 60mm
θ1 = 45°
Page No: 4
Name: ARJUN MANIKRAO PAUL
Roll: N005
TOPIC: SECTION OF SOLID CLUBBED WITH DEVELOPMENT OF SOLID
Assignment No:- 2
RF: 1:1
60mm
45° = θ1
40 mm
X
Y
V
T
A
B
C
D
O

Que 1) A square pyramid of base 30mm and height 50 mm long. It is freely suspended from one of the corners of its base. The axis is parallel to the V P. Draw the projections of the pyramid.

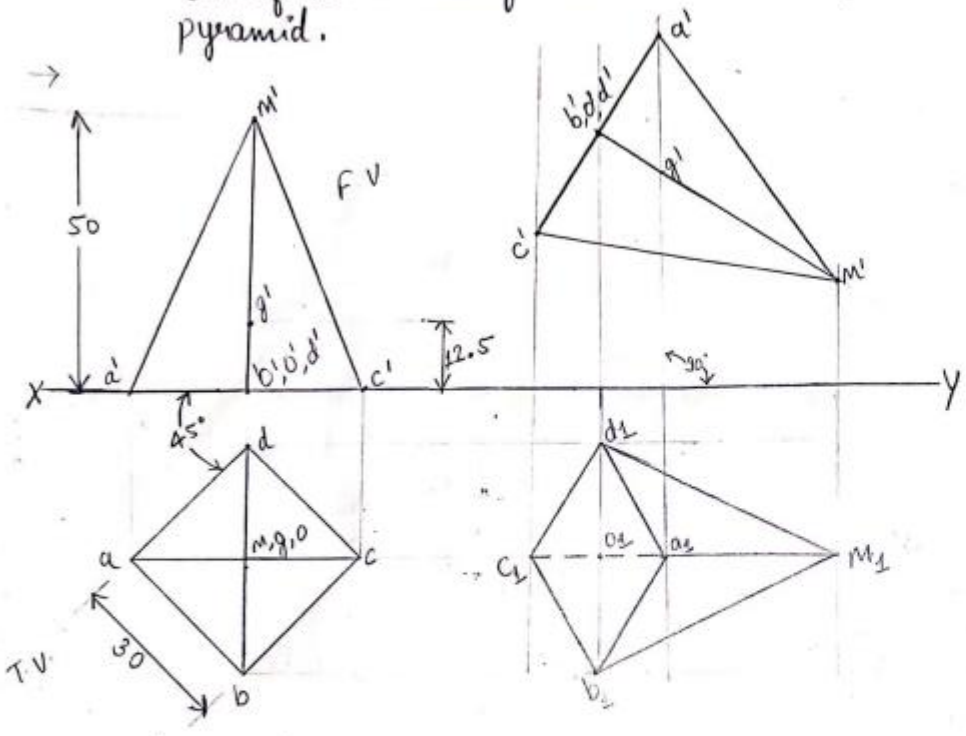

base length = ab = bc = cd = da = 30

height = m'o' = 50

Procedure :

(1) Draw the Top view of pyramid in H.P with base length of 30.

(2) Draw end projectors on V.P. and then make F.V. with height 50.

(3) Mark centre of gravity at h/4.

(4) Suspend the F.V. from point 'a' and make c.o.g 'g' exactly below it with prope distance.

(5) Now project other points of F.V

(6) Draw end projectors to H.P

(7) Combine projectors from T.V. to get final diagram.

(8) Label and check for hidden lines & axes.

Name - Ayush Raghuwanshi

Roll No - N054

Assignment No - A1

Question No - 1

ALL DIMENSIONS ARE IN MM

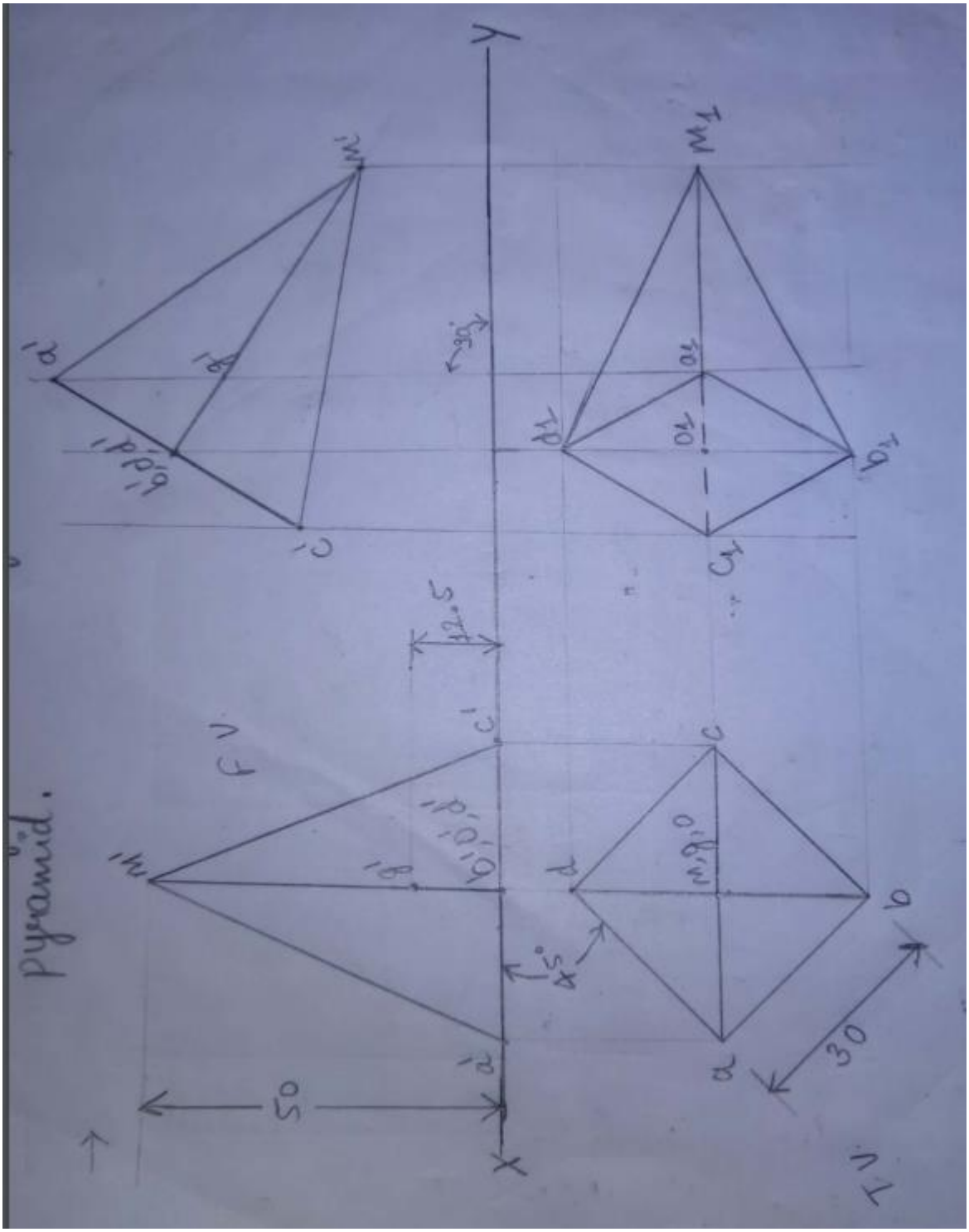
Y
X
50
30
45°
45°
F.V
T.V
pyramid.

Que 2) A cube of 50 mm edge resting on one of its corners on H.P. Draw the projections of the cube when the body diagonal of the cube is perpendicular to H.P.

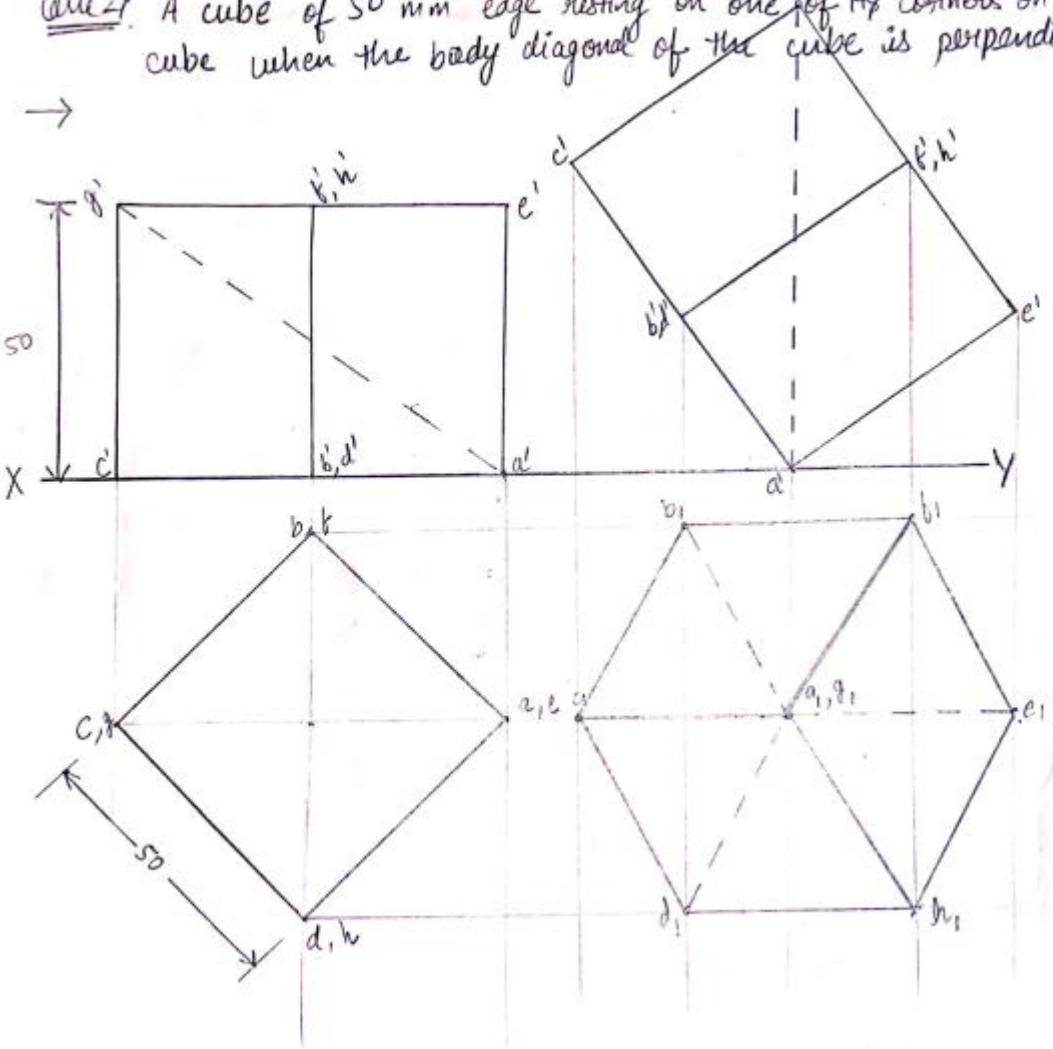

edge length = 50

Procedure :-

(1) Draw top view with edges of 50, project projectors to V.P to make F.V. with height 50

(2) Mark diagonal with dash line.

(3) Now make g'a' perpendicular to H.P.

(4) Project other points to form inclined F.V.

(5) Make projectors to H.P.

(6) Combine with projectors of T.V to get final figure

(7) Label them all and check for hidden lines and axes

Name - Ayush Raghuwanshi
Roll.No - N054
Assignment No - A1
Question No - 2

ALL DIMENSIONS ARE IN MM

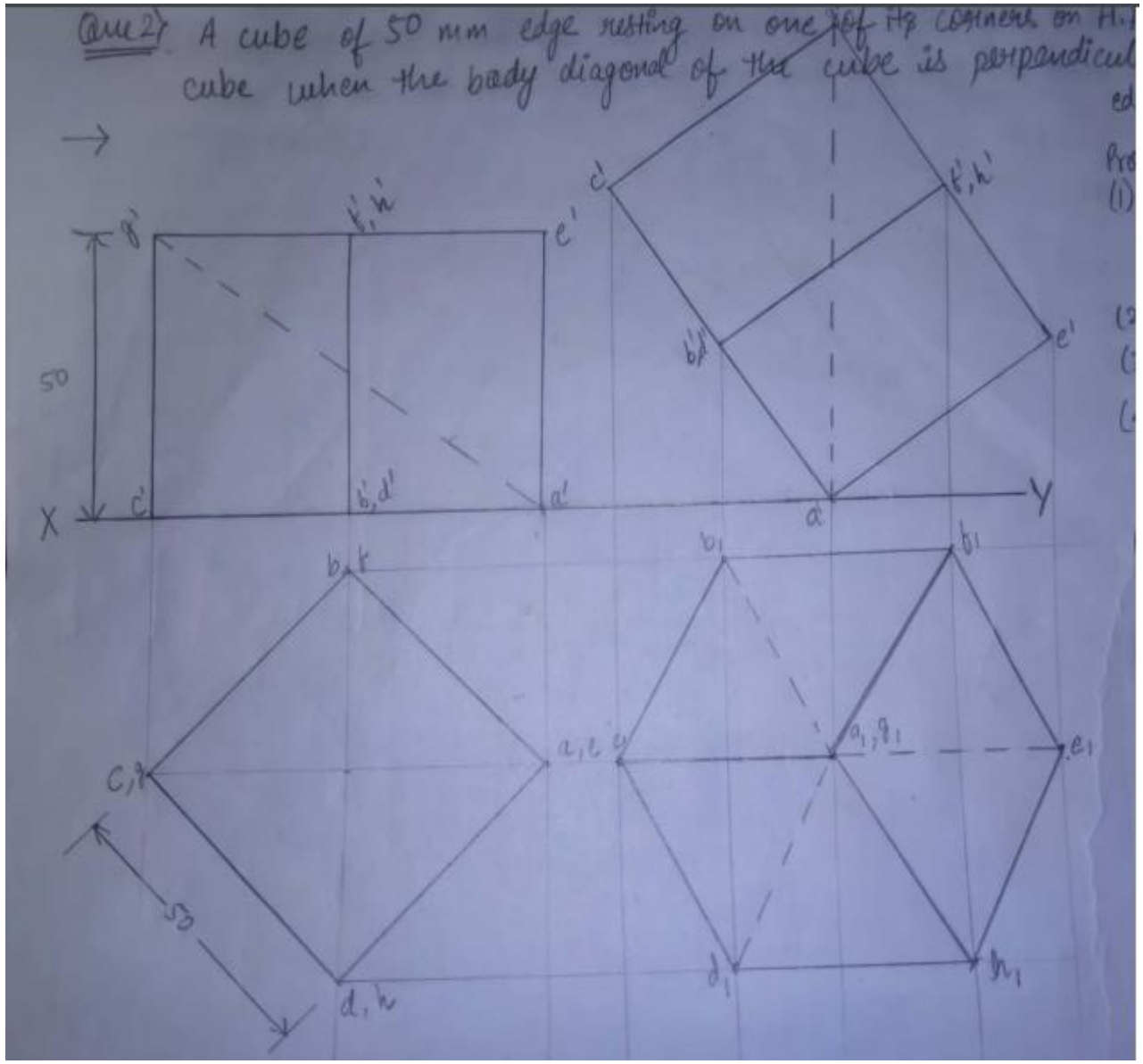
Que 2) A cube of 50 mm edge resting on one of its corners on H.P
cube when the body diagonal of the cube is perpendicul
50
X
Y
g'
f',h'
e'
c'
b',d'
a'
a
b,f
c,g
a,e
d,h
50
b_1
g_1
e_1
d_1
h_1

Que 1) A cylinder of diameter 50 mm and length of the axis 65 mm rests on its base with the axis perpendicular to the H.P. It is cut by the cutting plane perpendicular to the V.P inclined at 45° to the H.P and passing through a point on axis 25mm from the top. Draw the front view, the sectional top view and development of the lateral surface of the cylinder.

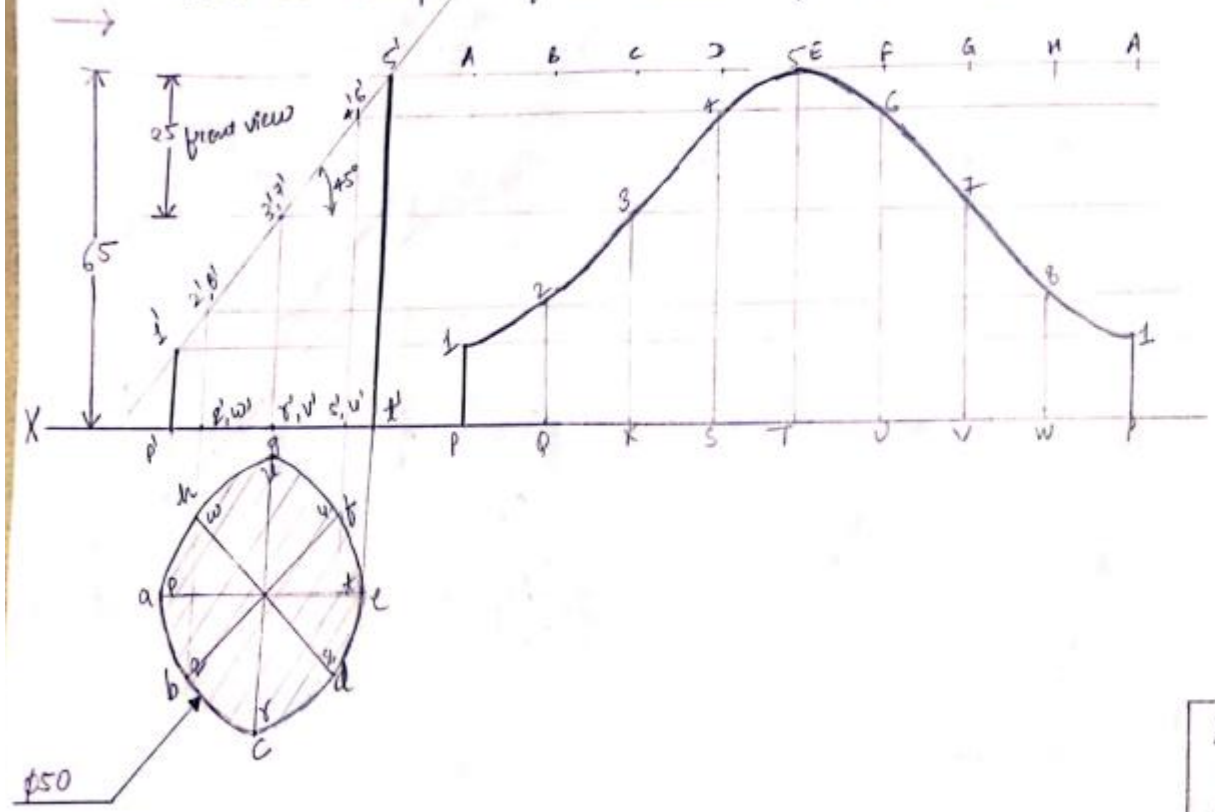

Name - Ajesh Raghuwanshi
Roll No - 10574
Assignment No - A2
Question No - 1

ALL DIMENSIONS ARE IN MM

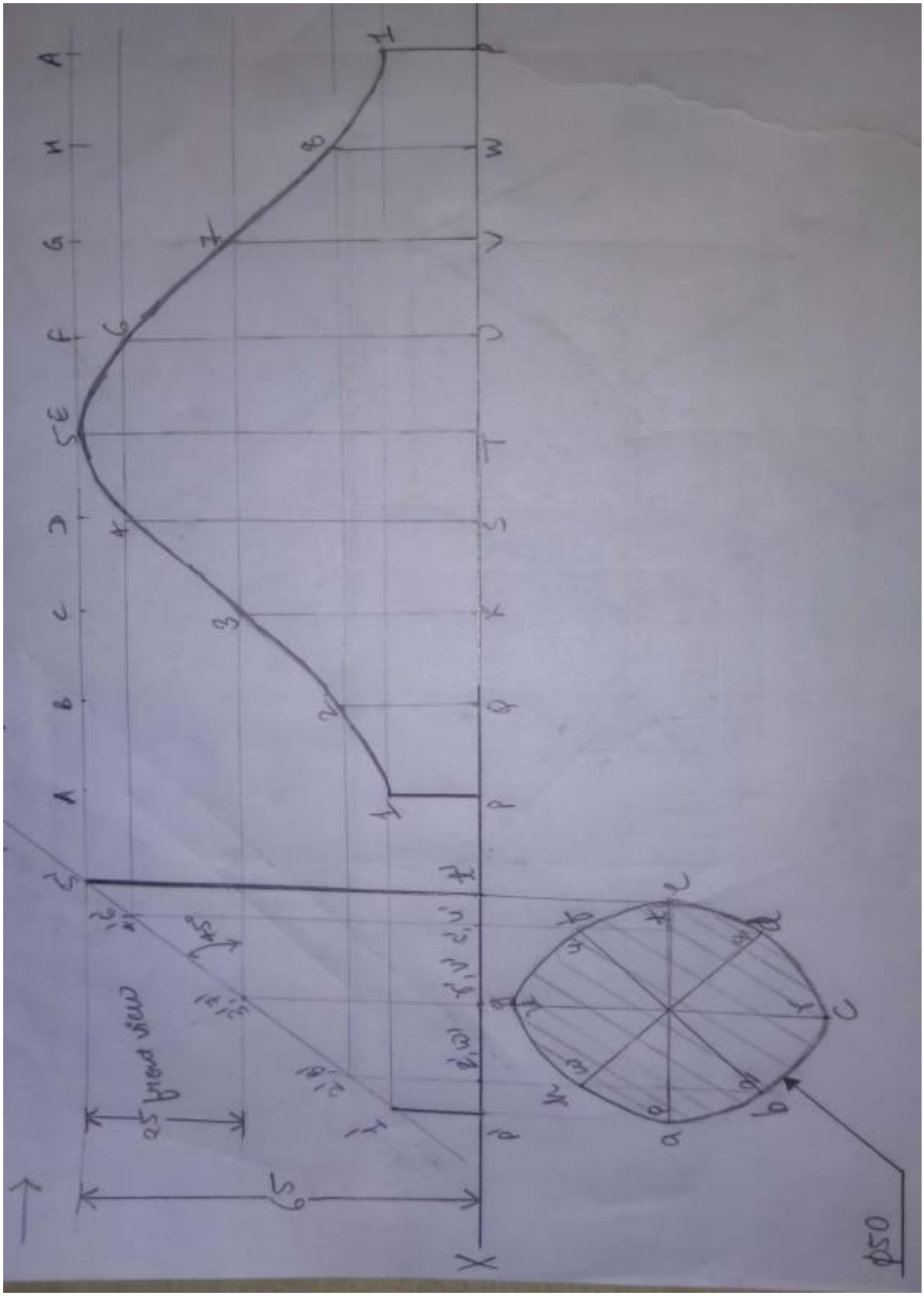
A
H
G
F
E
D
C
B
A
X
25 Broad View
Ø50

Que 2) A pentagonal prism having a base within a 30 mm side and 70 mm long axis is resting on its base on HP, such that one of its rectangular faces is parallel to VP. It is cut by an auxiliary inclined plane making an angle of 45° with HP and passes through the midpoint of axis. Draw the sectional top view, true shape of the sectional view and development of lateral surface of truncated prism.

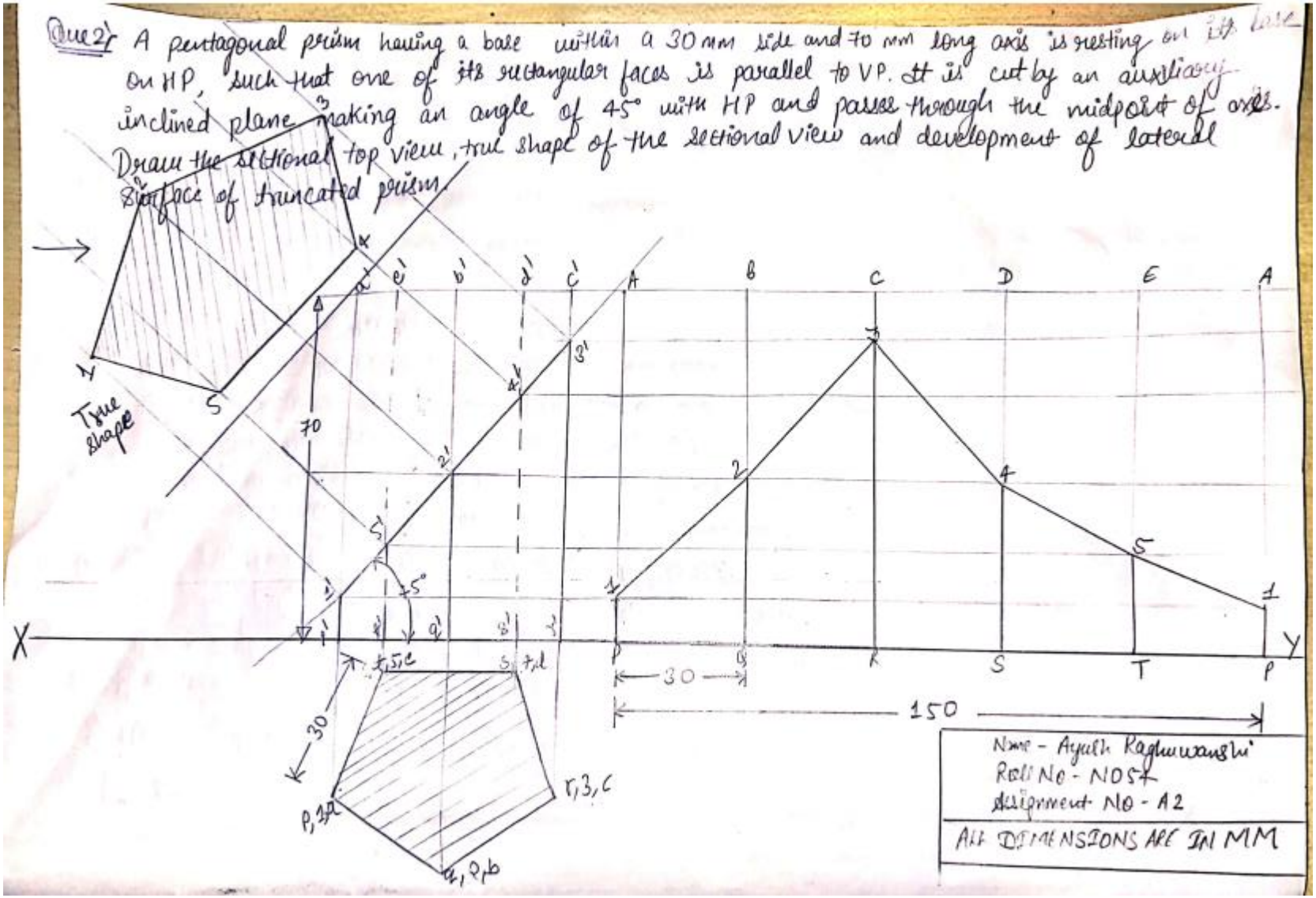

Name - Ayush Raghuwanshi
Roll No - N057
Assignment No - A2

All DIMENSIONS ARE IN MM

Procedure :-

(1) Make a cylinder of diameter 50 mm and axis 65mm

(2). Now mark 25 mm from top on the axis and make a line at an angle of 45° with H.P.

(3). Mark the points where this line cuts the lines of cylinder's F.V.

(4) Make projections of the points above parallel to H.P.

(5). Make a line on the XY axis and cut into 8 parts, this line will be equal to the perimeter of fig. in T.V.

(6) Project the given points up parallel to the V.P. to intersect with the projectors from cut surface

(7). Mark the intersected points and then join them together to form development of lateral surface of the cylinder

(8) Label all the points and distances

(9) Check for hidden lines, axes and projectors.

Que 2: A pentagonal prism having a base within a 30 mm side and 70 mm long axis is resting on its on HP, such that one of its rectangular faces is parallel to V.P. It is cut by an auxiliary inclined plane making an angle of 45° with HP and passes through the midpoint of axis. Draw the sectional top view, true shape of the sectional view and development of lateral surface of truncated prism.

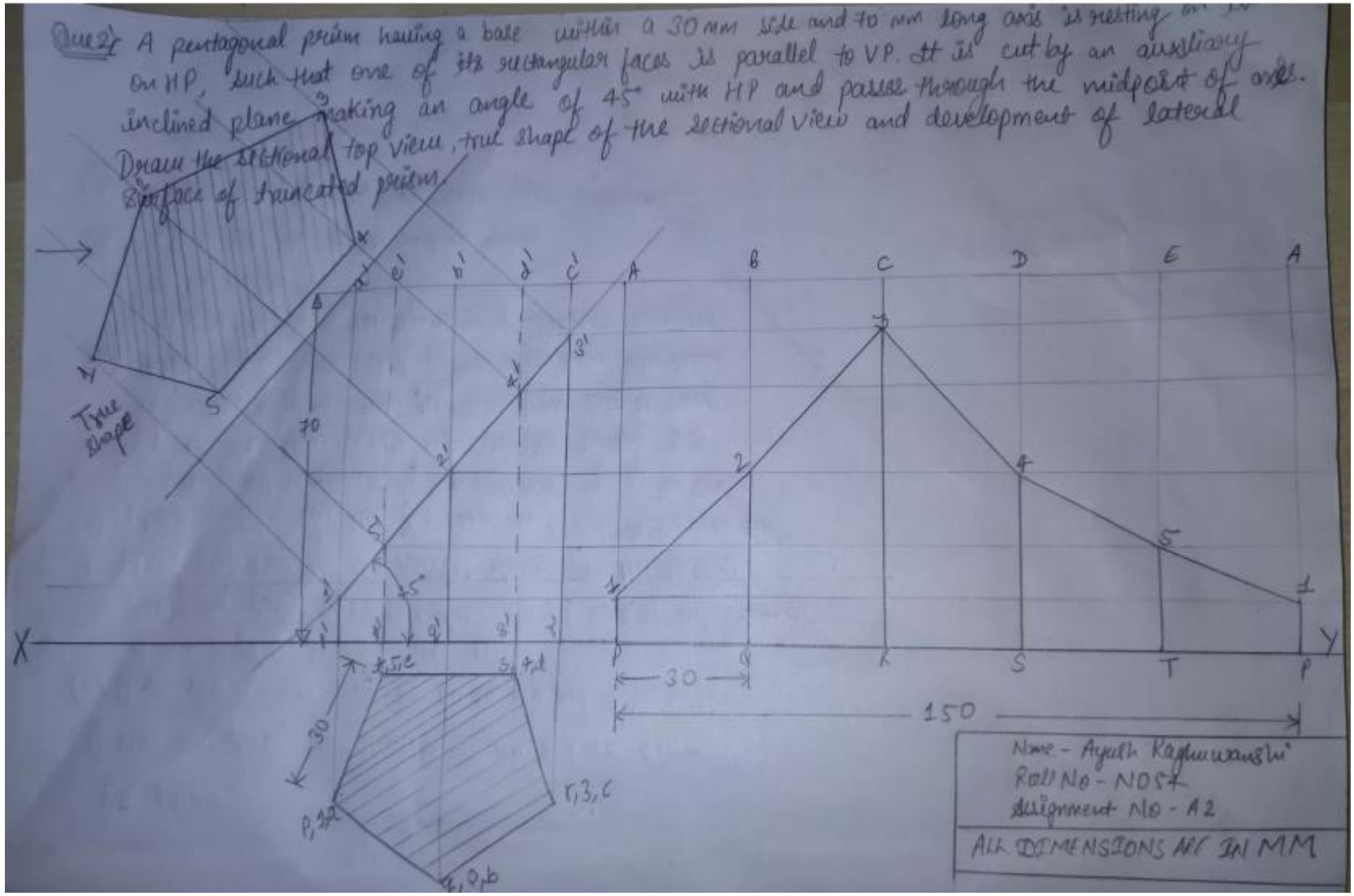

Procedure :-

(1). Make a pentagon of side 30 mm in H.P. This will be our T.V.

(2). Now project the end points parallel to V.P. upto 70mm to form F.V. of the prism.

(3). Now make an auxiliary plane inclined 45° to HP passing through mid point of axes(2') which will be 35 mm above H.P.

(4) Project these points perpendicular to the plane.

(5). Measure the dist. b/w points 1, 2, 3, 4 & 5 and V.P. and cut the arcs of same in these projectors made in step 4.

(6). Join these new points to form TRUE SHAPE of the figure

(7) Taking the points that cut the F.V.; project them horizontally

(8) Perimeter of T.V. = 30 x 5 = 150 mm

(9). Take a point on XY axes and make 5 points on the interval of 30mm.

(10). Make projections parallel to V.P. from these points

(11) Mark the intersected points and join them together to form DEVELOPMENT OF LATERAL SURFACE OF TRUNCATED PRISM.

(12). Label all the points and dimensions.

(13). Check for hidden lines, projectors and axes.

QUESTION PAPERS (SESSIONAL AND END SEMESTER)

VISVESVARAYA NATIONAL INSTITUTE OF TECHNOLOGY, NAGPUR 440010

Time-Table for First Sessional Examination (Second Semester B. Tech.)

Date	Slot	Course	Time	Section R, S, T, U, L	Section W, X, Y, Z, N
12 Feb 2020 Wednesday	A	MAL102 Mathematics – II	9.00 to 10.00 am	CHE Dept.+ CRC	**CRC**
	B	HUL102 Social Science	2.00 to 3.00 pm	CHE Dept.+ CRC	
13 Feb 2020 Thursday	C	PHL101 Physics	9.00 to 10.00 am		CHE Dept.+ CRC
	D	CHL101 Chemistry	2.00 to 3.00 pm	CHE Dept.+ CRC	
14 Feb 2020 Friday	E	AML151 Engineering Mechanics	9.00 to 10.00 am		CHE Dept.+ CRC
	F	EEL101 Electrical Engineering	2.00 to 3.00 pm	CHE Dept.+ CRC	
15 Feb 2020 Saturday	G	MEL101 Engineering Drawing	9.00 to 10.00 am		CHE Dept. + CRC + **MEC Dept**
	H	HUL101 Communication Skills	2.00 to 3.00 pm		**CRC**
		CSL101 Computer Programming		CHE Dept.	

Seating Arrangement for First Sessional Examination (Second Semester B. Tech.)

Chemical Engg. Dept. + Class Room Complex + Mechanical Engg. Department				Class Room Complex (*for Math-II, and CS papers only*)	
Roll Nos.	Roll Nos.	Room No.	Department	Roll Nos.	Room No.
R01 - R70	W01 - W70	CHE 203	Chemical Engg. Dept.	W01-W40	CRC 1-4
R71 - R96 + S01- S44	W71 - W92 + X01- X44	CHE 204		W41-W92	CRC 1-3
S45 - S96 + T01 - T18	X45 - X92 + Y01 - Y18	CHE 103		X01-X40	CRC 2-1
T19 - T88	Y19 - Y88	CHE 104		X41-X92	CRC 2-2
T89 - T96 + U01- U62	Y89 - Y92 + Z01- Z62	CHE 002		Y01-Y40	CRC 2-4
U63 - U97 Repeater of **R S T U L** section	Z63 - Z92 Repeater of **W X Y Z N** section	CHE 003, CHE 004		Y41-Y92	CRC 2-3
		CRC 1-3, CRC 1-4	Class Room Complex	Z01-Z40	CRC 3-1
L01 - L55	N01 - N55	CRC 1-1		Z41- Z92	CRC 3-2
L56 - L96	N56 - N92	CRC 1-2		N01-N40	CRC 3-4
For ED paper only ►	*N01 - N45 (**M-1-4**)* *N81 - N92 (**M-1-7**)*	*N46 - N80 (**M-1-6**)*	Mech. Engg. Dept.	N41-N92	CRC 3-3
				Repeater	CRC 4-2, CRC 4-3

Note: 1) All students should occupy the allotted seat 15 minute before the scheduled time of examination. 2) All students should carry valid ID card in examination. 3) PwD Student should carry valid PwD certificate to claim for 'Extra Time' in examination. 4) Student shall bring a drawing board of **Half Imperial (A2)** size for examination of ***MEL101 Engineering Drawing.*** 5) **All repeater students shall also see the time-table displayed by the department offering the course.**

Dr. A Y Vyavahare 11-01-2020
First Year Co-ordinator

Dr. S B Thombre
Dean (Academic)

Visvesvaraya National Institute of Technology, Nagpur
Department of Mechanical Engineering

1st Sessional Examination (S19) | **1st Year B. Tech. Engineering Drawing (MEL 103)**
Max. Marks: 15 | **Max. Time: 1 Hr.**

Instruction to examinees
1. Retain all the construction lines. 2. Dimensioning is essential. 3. Use 1st angle projection method

Q 1.	Draw front and top view from an isometric view as shown in the figure 1 on back side.	5
Q 2.	A line AB 90 mm long has its end A 25 mm below the horizontal plane (HP) and 30 mm behind the vertical plane (VP). Its other end B lies in first quadrant. The line is inclined at 60^0 to HP and its top view appears at 90^0 w. r. t. XY. Draw the projections of the line along with its traces and find distance of the point B from both the reference planes.	5
Q 3.	A pentagonal lamina of side 35 mm is resting on one of its edges on HP with opposite corner touching VP at 25 mm above HP. The edge which is on HP is parallel to VP. Draw the projections of the lamina to determine surface inclinations with the HP and VP, also find distance of resting edge form VP.	5

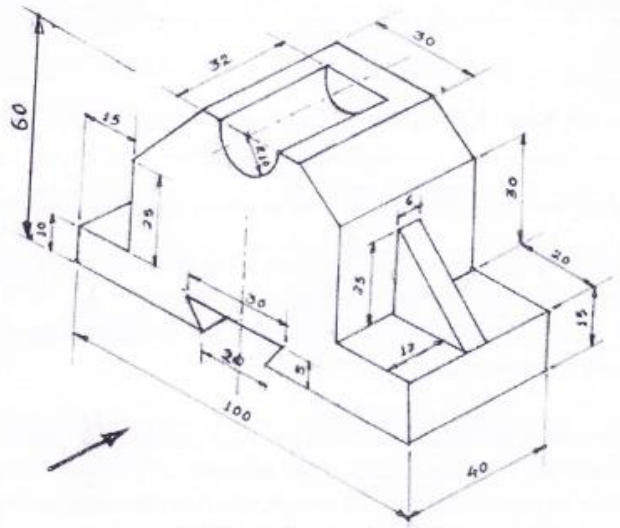

(All dimensions are in mm)

Rubric Template for Q. No. 1

criteria	Total Marks	Level 1 (1/4 marks)	Level 2 (2/4 marks)	Level 3 (3/4 marks)	Level 4 (Full marks)
Front view visible lines	1	04 lines drawn	08 lines drawn	12 lines drawn	16 lines drawn
Front view hidden in imaginary lines	1	04 lines drawn	07 lines drawn	10 lines drawn	14 lines drawn
Top view visible lines	1	05 lines drawn	10 lines drawn	15 lines drawn	20 lines drawn
Top view hidden in imaginary lines	1	04 lines drawn	08 lines drawn	12 lines drawn	16 lines drawn
Dimensioning	1	05 dimensions shown	09 dimensions shown	13 dimensions shown	18 dimensions shown

Rubric Template for Q. No. 2

criteria	Total Marks	Level 1 (1/4 marks)	Level 2 (2/4 marks)	Level 3 (3/4 marks)	Level 4 (Full marks)
Front and top view visible & imaginary lines	1	01 lines drawn	02 lines drawn	03 lines drawn	04 lines drawn
Methos used for obtaining point B	1	Step1 shown	Step2 shown	Step3 shown	Step4 shown
Distance of point B	1	1D from XY	1D from XY with dimension	2D from XY	2D from XY with dimension
Traces	1	Any one of H'- H - V'-V	Any two of H'- H - V'-V	Any three of H'- H - V'-V	All of H'- H - V'-V
Dimensioning	1	01 dimensions shown	02 dimensions shown	03 dimensions shown	05 dimensions shown

Rubric Template for Q. No. 3

criteria	Total Marks	Level 1 (1/4 marks)	Level 2 (2/4 marks)	Level 3 (3/4 marks)	Level 4 (Full marks)
Front and top view visible & imaginary lines	2	01 lines drawn	02 lines drawn	03 lines drawn	04 lines drawn
Methos used for obtaining distance of edge	1	Step1 shown	Step2 shown	Step3 shown	Step4 shown
Methos used for obtaining surface inclination	1	Any one of HP or VP inclination shown		Both of HP and VP inclination shown	
Dimensioning	1	01 dimensions shown	02 dimensions shown	03 dimensions shown	04 dimensions shown

12/3/21, 12:01 PM Gmail –
Weekly Feedback: Engineering Drawing (N-Section), Summer 2020
Sat, Feb 15, 2020 at 5:52 PM To: Devesh Jain
It is in the attachment as "FIRST SESSIONAL EXAM QUESTION PAPER and tentative solution:-
NOTE: First sessional examination drawing answer sheets can be reviewed and discussed in respective practical classes.". -Nitin

NOTE: Second sessional and End semester Examinations were not conducted due to COVID-19 Pandemic

EVALUATION OF EXAMINATION ANSWER SHEETS (FIRST SESSIONAL EXAMINATION SUBMITTED BY STUDENTS):

NOTE: The answer sheets are evaluated based on the above Rubrics with discussion with students as per following sketches.

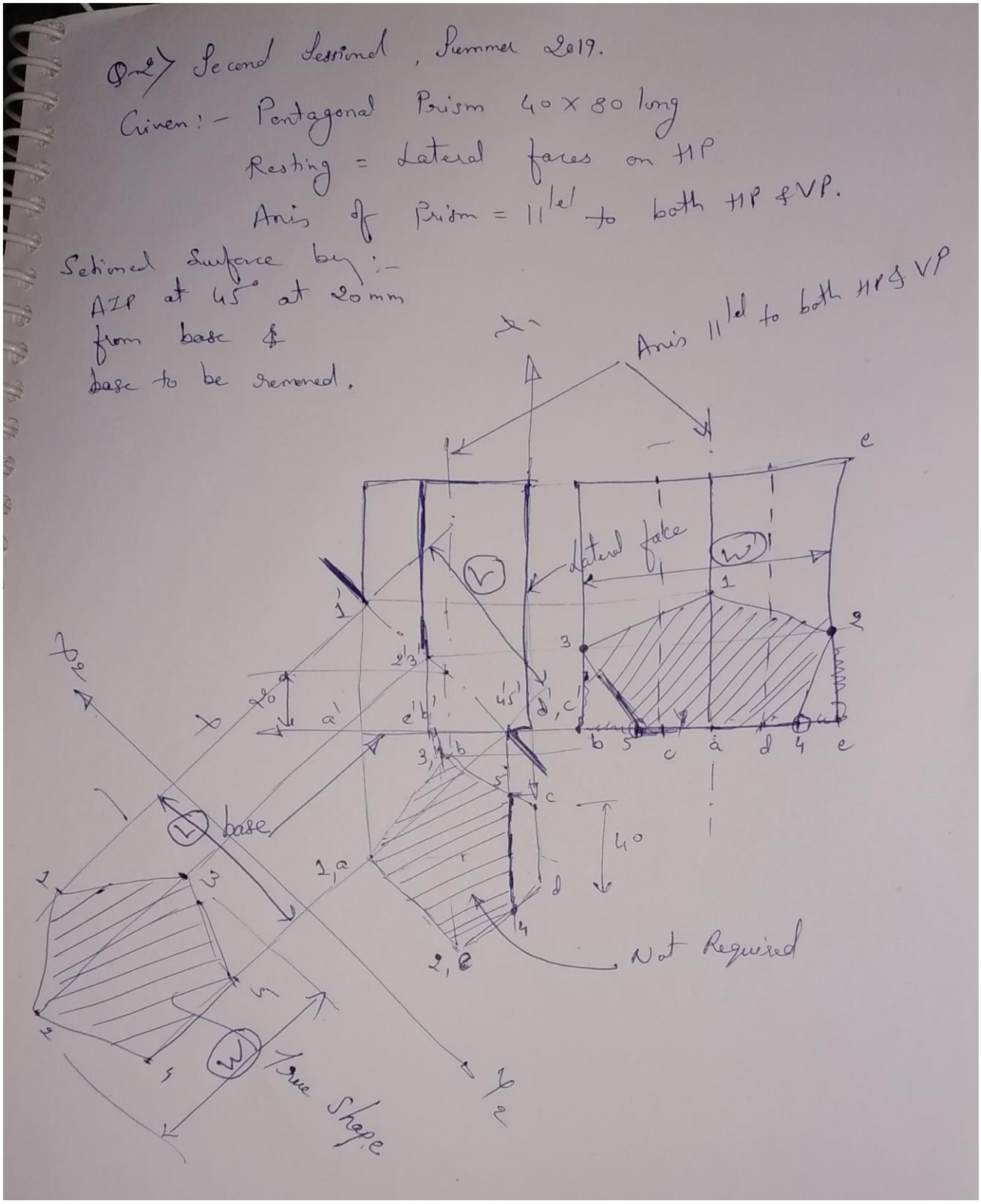

ATTENDANCE AND MARK RECORD FOLLOWS (Start of COVID-19 Pandemic):-

SN	ID NO	Enrolment No	CGPA	Marks as CGPA (out of 30)	Sessional Marks (Out of 30)	Marks on assignment (Out of 40)	Total (out of 100)	Rounded off Total (out of 100)
1	24821	N001	8.82	26.46	26.00	35	87.46	88
2	24822	N002	8.77	26.31	26.00	40	92.31	93
3	24824	N004	7.55	22.65	16.00	25	63.65	64
4	24825	N005	5.50	16.50	10.00	40	66.50	67
5	24826	N006	8.91	26.73	16.00	39	81.73	82
6	24827	N007	7.05	21.15	16.00	40	77.15	78
7	24828	N008	6.32	18.96	16.00	38	72.96	73
8	24829	N009	7.09	21.27	22.00	38	81.27	82
9	24830	N010	8.14	24.42	16.00	38	78.42	79
10	24831	N011	5.56	16.68	8.00	30	54.68	55
11	24832	N012	5.82	17.46	20.00	40	77.46	78
12	24833	N013	6.17	18.51	4.00	34	56.51	57
13	24834	N014	7.91	23.73	22.00	37	82.73	83
14	24835	N015	6.45	19.35	8.00	40	67.35	68
15	24836	N016	6.60	19.80	12.00	37	68.80	69
16	24837	N017	7.27	21.81	14.00	40	75.81	76
17	24838	N018	7.77	23.31	22.00	33	78.31	79
18	24839	N019	8.27	24.81	16.00	39	79.81	80
19	24840	N020	6.83	20.49	6.00	40	66.49	67
20	24841	N021	6.09	18.27	16.00	36	70.27	71
21	24842	N022	7.91	23.73	20.00	35	78.73	79
22	24844	N023	6.05	18.15	12.00	39	69.15	70
23	24846	N024	6.68	20.04	14.00	32	66.04	67
24	24847	N025	6.77	20.31	6.00	38	64.31	65
25	24848	N026	5.95	17.85	14.00	36	67.85	68
26	24849	N027	6.50	19.50	18.00	40	77.50	78
27	24850	N028	6.60	19.80	4.00	35	58.80	59
28	24851	N029	8.50	25.50	14.00	40	79.50	80
29	24852	N030	5.77	17.31	2.00	35	54.31	55
30	24853	N031	5.83	17.49	2.00	35	54.49	55
31	24857	N032	6.36	19.08	10.00	34	63.08	64
32	24858	N033	6.50	19.50	2.00	27	48.50	49
33	24859	N034	7.23	21.69	8.00	15	44.69	45
34	24860	N035	7.14	21.42	22.00	40	83.42	84
35	24861	N036	8.00	24.00	22.00	40	86.00	86
36	24862	N037	9.09	27.27	20.00	39	86.27	87
37	24863	N038	7.32	21.96	6.00	9	36.96	37
38	24864	N039	6.32	18.96	16.00	40	74.96	75
39	24865	N040	9.00	27.00	2.00	40	69.00	69
40	24866	N041	7.36	22.08	16.00	39	77.08	78
41	24867	N042	7.36	22.08	24.00	40	86.08	87
42	24868	N043	5.94	17.82	6.00	35	58.82	59
43	24869	N044	9.23	27.69	28.00	38	93.69	94
44	24871	N045	5.45	16.35	2.00	33	51.35	52
45	24872	N046	8.23	24.69	10.00	35	69.69	70
46	24873	N047	5.00	15.00	4.00	36	55.00	55

47	24874	N048	8.82	26.46	16.00	40	82.46	83
48	24876	N049	6.36	19.08	24.00	39	82.08	83
49	24877	N050	5.95	17.85	4.00	40	61.85	62
50	24878	N051	8.59	25.77	16.00	38	79.77	80
51	24879	N052	8.23	24.69	12.00	33	69.69	70
52	24880	N053	5.73	17.19	16.00	40	73.19	74
53	24881	N054	6.00	18.00	10.00	40	68.00	68
54	24882	N055	5.73	17.19	22.00	36	75.19	76
55	24883	N056	8.55	25.65	16.00	40	81.65	82
56	24884	N057	6.95	20.85	22.00	40	82.85	83
57	24885	N058	8.18	24.54	20.00	40	84.54	85
58	24886	N059	6.14	18.42	16.00	35	69.42	70
59	24888	N061	7.27	21.81	6.00	33	60.81	61
60	24890	N062	7.91	23.73	14.00	40	77.73	78
61	24891	N063	5.32	15.96	12.00	33	60.96	61
62	24892	N064	8.09	24.27	22.00	40	86.27	87
63	24893	N065	8.18	24.54	22.00	40	86.54	87
64	24895	N066	5.73	17.19	6.00	40	63.19	64
65	24896	N067	5.82	17.46	8.00	37	62.46	63
66	24899	N068	6.55	19.65	18.00	31	68.65	69
67	24900	N069	7.59	22.77	18.00	37	77.77	78
68	24901	N070	6.11	18.33	8.00	35	61.33	62
69	24902	N071	5.50	16.50	6.00	25	47.50	48
70	24903	N072	8.23	24.69	12.00	40	76.69	77
71	24904	N073	7.77	23.31	12.00	40	75.31	76
72	24905	N074	6.23	18.69	14.00	40	72.69	73
73	24906	N075	6.00	18.00	12.00	25	55.00	55
74	24907	N076	8.55	25.65	14.00	25	64.65	65
75	24908	N077	5.45	16.35	4.00	25	45.35	46
76	24909	N078	5.28	15.84	12.00	40	67.84	68
77	24910	N079	8.45	25.35	22.00	39	86.35	87
78	24911	N080	7.14	21.42	12.00	40	73.42	74
79	24912	N081	8.36	25.08	14.00	40	79.08	80
80	24913	N082	7.95	23.85	14.00	40	77.85	78
81	24914	N083	6.00	18.00	2.00	29	49.00	49
82	24915	N084	8.18	24.54	18.00	40	82.54	83
83	24916	N085	6.41	19.23	20.00	40	79.23	80
84	24917	N086	7.05	21.15	12.00	39	72.15	73
85	24918	N087	6.27	18.81	14.00	40	72.81	73
86	24919	N088	6.32	18.96	18.00	25	61.96	62
87	24920	N089	6.64	19.92	20.00	39	78.92	79
88	24921	N090	5.90	17.70	2.00	21	40.70	41
89	24922	N091	7.91	23.73	14.00	25	62.73	63
90	24923	N092	5.14	15.42	2.00	25	42.42	43
91	22238	BT18CIV007	5.42	16.26	2.00	25	43.26	44
92	22436	BT18CIV025	4.81	14.43	8.00	25	47.43	48
93	22499	BT18CIV029	5.43	16.29	6.00	34	56.29	57
94	22643	BT18CIV044	5.64	16.92	10.00	34	60.92	61
95	22889	BT18CIV072	5.04	15.12	6.00	33	54.12	55
96	22644	BT18CSE094	5.73	17.19	4.00	25	46.19	47
97	23021	BT18CSE141	5.26	15.78	6.00	33	54.78	55
98	22205	BT18ECE011	5.57	16.71	6.00	30	52.71	53

99	22598	BT18ECE079	5.22	15.66	6.00	37	58.66	59
100	23263	BT18EEE144	6.00	18.00	6.00	40	64.00	64
101	22900	BT18MEC110	5.24	15.72	6.00	36	57.72	58
102	22999	BT18MME069	5.44	16.32	4.00	15	35.32	36
103	23014	BT18MME070	5.57	16.71	10.00	33	59.71	60
104	23197	BT18MME084	5.66	16.98	4.00	29	49.98	50
105	23258	BT18MME095	6.00	18.00	1.00	40	59.00	59
106	21401	BT17EEE064	5.28	15.84	4.00	34	53.84	54

----- THE END ----